BLAKELEY / MUD LAKES WEIR BOXES PROJECT

ALABAMA STATE PORT AUTHORITY
MOBILE, ALABAMA 36602

PROJECT 11381 TASK 3

ALABAMA PORT AUTHORITY
PORT OF MOBILE

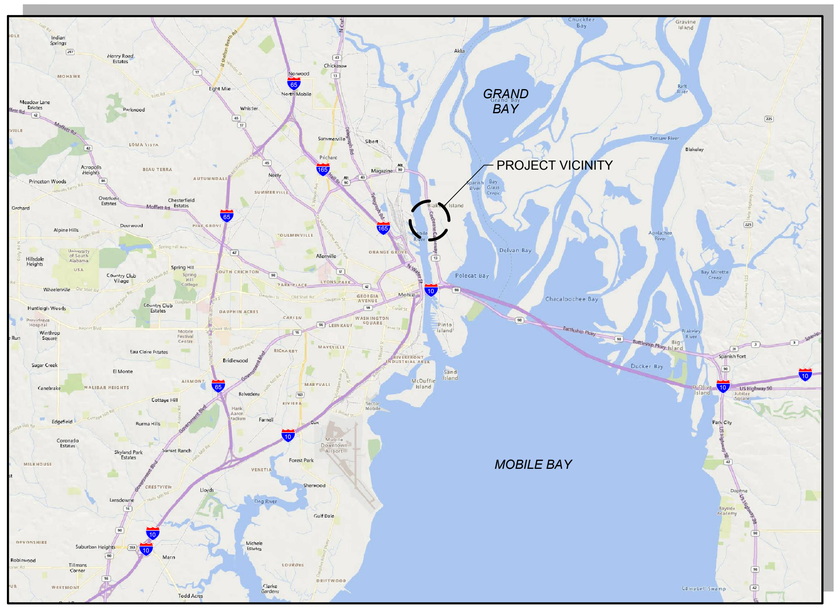

VICINITY MAP
SCALE: NTS

LOCATION PLAN
SCALE: NTS

ISSUED FOR BID
ISSUED: 2025-04-04
NOT TO BE USED FOR CONSTRUCTION

ALABAMA PORT AUTHORITY
PORT OF MOBILE

Mark	Description	Date	Appr.

BLAKELEY / MUD LAKES WEIR BOXES PROJECT

COVER SHEET

Designed by: PWK
Date: 2025-04-04
Rev.
Dwn by: HR
Ckd by: PGV
M&N Project No. 212511-04
Drawing code:
Reviewed by: MR
Submitted by: SUBMITTER'S NAME MOFFATT & NICHOL
Drawing Scale:
Plot scale: 1:1 (D SHEET)

moffatt & nichol
11 N. WATER ST., SUITE 20220
MOBILE, AL 36602
251-378-9000
WWW.MOFFATTNICHOL.COM

ALABAMA PORT AUTHORITY
PORT OF MOBILE
250 N. WATER STREET
MOBILE, AL 36602

ALABAMA LICENSED No. 50467 PROFESSIONAL ENGINEER PETER WILLIAM KOTULAK
SEAL
Peter W. Kotulak
2025.04.04
11:13:00-04'00'

Sheet Reference No.
G-001
INDEX: 1 OF 22

File: Q:\BR\212511-04\20 CADD_Active_Sheets\Sol Blakeley Weir Box\212511-04-WB-G-001 , Plotted: 4/4/2025 11:02 AM by PVOELKER, PAUL , Saved: 4/4/2025 11:01 AM by PVOELKER

DRAWING SCALES SHOWN BASED ON 22"x34" DRAWING

INDEX OF DRAWINGS

INDEX NO.	SHEET NO.	SHEET TITLE
		GENERAL
1	G-001	COVER SHEET
2	G-002	INDEX OF DRAWINGS, GENERAL NOTES, AND SEQUENCE OF CONSTRUCTION
3	G-003	LEGEND AND ABBREVIATIONS
4	G-101	PLAN - GENERAL ARRANGEMENT
		GEOTECHNICAL
5	B-101	PLAN - BORING LOCATIONS
6	B-201	PROFILE - BORING
		CIVIL
7	C-101	PLAN - EXISTING CONDITION AND SITE PREPARATION
8	C-102	PLAN - WEIR BOX AND PIPING LAYOUT
9	C-201	PROFILE - WEIR BOX
		STRUCTURAL
10	S-001	STRUCTURAL NOTES AND DESIGN CRITERIA
11	S-101	PLAN - EAST WEIR BOX FOUNDATION AND COLUMN LAYOUT
12	S-102	PLAN - WEST WEIR BOX FOUNDATION AND COLUMN LAYOUT
13	S-103	PLAN - EAST WEIR BOX FRAMING AND DECK
14	S-104	PLAN - WEST WEIR BOX FRAMING AND DECK
15	S-201	ELEVATIONS - TYPICAL WEIR BOX FRAMING
16	S-202	ELEVATION - EAST WEIR BOX FRAMING
17	S-203	ELEVATION - WEST WEIR BOX FRAMING
18	S-501	DETAILS - WEIR BOX FRAMING
19	S-502	DETAILS - WEIR BOX LADDER AND GUARD RAILS
20	S-503	DETAILS - WEIR BOX WALK AND OUTFALL PIPES
21	S-504	DETAILS - WEST JUNCTION BOX SHEET 1 OF 2
22	S-505	DETAILS - WEST JUNCTION BOX SHEET 2 OF 2

GENERAL NOTES:

1. ALL WORK SHALL COMPLY WITH THE LATEST BUILDING, ELECTRICAL, MECHANICAL CODES, AND CODES AND STANDARDS LISTED IN THE CONTRACT DOCUMENTS. CODES SHALL BE THE LATEST ISSUE, INCLUDING SUPPLEMENTS, UNLESS OTHERWISE NOTED.
2. THESE CONTRACT DOCUMENTS REPRESENT THE FINISHED DIKE STRUCTURE. THEY DO NOT INDICATE THE METHOD, MEANS, OR PROCEDURES OF CONSTRUCTION. THE CONTRACTOR SHALL TAKE ALL MEASURES NECESSARY TO PROTECT THE DIKE STRUCTURE AND ADJACENT INFRASTRUCTURE DURING CONSTRUCTION.
3. THE VERTICAL DATUM IS BASED UPON NORTH AMERICAN VERTICAL DATUM OF 1988 (NAVD88).
4. HORIZONTAL DATUM: NAD 1983 ALABAMA WEST STATE PLANE COORDINATE SYSTEM.
5. CONFIRM HORIZONTAL AND VERTICAL CONTROL SURVEY MONUMENTS WITH OWNER PRIOR TO START OF CONSTRUCTION.
6. TOPOGRAPHIC DATA COMPILED BY SURVEY PERFORMED BY HYDROTERRA TECHNOLOGIES, LLC DATED APRIL 13, 2023 AND BY THOMPSON ENGINEERING DATED MARCH 2024.
7. GEOTECHNICAL INVESTIGATIONS WERE PERFORMED BY THOMPSON ENGINEERING AND GEOTECHNICAL ENGINEERING TESTING IN 2024. LOCATIONS OF BOREHOLES AND BORING LOGS, ARE PRESENTED IN THE DRAWINGS. THE GEOTECHNICAL DATA REPORT CAN BE OBTAINED FROM THE CONSTRUCTION MANAGER.
8. THE CONTRACTOR SHALL BE RESPONSIBLE FOR THE MAINTENANCE OF THE CONSTRUCTION SITE AND THE AREAS OF WORK WHILE PERFORMING THE WORK OF THIS CONTRACT. CONSTRUCTION DEBRIS SHALL BE REMOVED FROM THE CONSTRUCTION SITE ON A DAILY BASIS. NO BURNING OF DEBRIS SHALL BE PERMITTED.
9. DURING ALL PHASES OF THE WORK ALL PRECAUTIONS SHALL BE TAKEN AS NECESSARY OR AS REQUIRED TO PERMANENTLY PREVENT CONTAMINATED WATER, VEHICLE FLUIDS, CONSTRUCTION DEBRIS, AND ANY OTHER CONTAMINANT FROM ENTERING THE WATERWAY.
10. CONTRACTOR SHALL PROVIDE AS-BUILT SURVEY AND DRAWINGS OF COMPLETED WORK TO ENGINEER. AS-BUILTS SHALL BE BOTH HARD COPY AND ELECTRONIC FORMAT (PDF AND NATIVE / CAD VERSION).
11. THE ACCURACY OF EXISTING STRUCTURES SHOWN ON PLANS ARE NOT GUARANTEED. ACTUAL FIELD CONDITIONS SHALL BE VERIFIED BY THE CONTRACTOR PRIOR TO FABRICATION OF MATERIALS, ORDERING MATERIALS, OR PERFORMING WORK.
12. ALL EXCAVATION AND TRENCHING, SHALL BE PERFORMED AS REQUIRED IN ACCORDANCE WITH LOCAL, STATE, AND FEDERAL REGULATIONS INCLUDING OSHA.
13. THERE IS AN EXISTING UNDERGROUND ELECTRIC LINE AND AN EXISTING UNDERGROUND WATER PIPE IN THE VICINITY OF THE NORTH DIKE ROADWAY. THE LOCATION OF UTILITIES AND STRUCTURES SHOWN HEREIN HAS BEEN TAKEN FROM AVAILABLE RECORDS. OWNER DOES NOT WARRANT THE COMPLETENESS OR CORRECTNESS OF THEIR LOCATIONS, IT SHALL BE THE CONTRACTOR'S RESPONSIBILITY TO LOCATE AND VERIFY ALL UTILITIES AND STRUCTURES WHETHER SHOWN HEREIN OR NOT, BEFORE COMMENCING WORK, AND PROTECT THEM FROM DAMAGE. SHOULD UTILITIES OR STRUCTURES BE ENCOUNTERED THAT ARE NOT INDICATED, THE ENGINEER SHALL BE NOTIFIED IMMEDIATELY.
14. THE CONTRACTOR SHALL VERIFY AND COORDINATE WITH ENGINEER ANY UTILITY LINES AND EQUIPMENT THAT MAY INTERFERE WITH THE WORK.
15. ALL TEMPORARY UTILITIES NECESSARY FOR CONSTRUCTION SHALL BE PROVIDED AT THE EXPENSE OF THE CONTRACTOR.
16. IT IS NOTED THAT THE MUD LAKES DMMA WAS FORMERLY TAILINGS PONDS FOR THE FORMER ALCOA ALUMINUM PLANT. THE PONDS WERE USED FOR PROCESSING BAUXITE ORE FOR THE MANUFACTURE OF ALUMINA. AS SUCH, THE BOTTOM OF THE PONDS CONTAIN “RED MUD” (BAUXITE RESIDUE). APA HAS TESTED THESE RESIDUALS AND FOUND THEM TO BE NON-HAZARDOUS; HOWEVER, THESE RESIDUALS DO EXHIBIT A HIGH PH AND SHOULD BE AVOIDED. NO PORTION OF THE WORK SHOULD REQUIRE CONTACT WITH THESE MATERIALS.

ENVIRONMENTAL PROTECTION:

1. THE CONTRACTOR SHALL FURNISH, INSTALL, MAINTAIN AND REMOVE UPON COMPLETION OF THE PROJECT ALL NECESSARY ENVIRONMENTAL PROTECTION AND WATER CONTROL DEVICES, INCLUDING BUT NOT LIMITED TO SEDIMENT CONTROL DEVICES, TARPAULINS, AND OTHER DEVICES NECESSARY TO PREVENT SOILS, SEDIMENTS, AND OTHER CONSTRUCTION-RELATED MATERIAL FROM ENTERING THE WATER AND LEAVING THE IMMEDIATE VICINITY OF THE SITE.
2. DURING THE COURSE OF CONSTRUCTION, THE CONTRACTOR SHALL CONDUCT OPERATIONS IN SUCH A MANNER AS TO MINIMIZE OR PREVENT ANY DAMAGE TO THE WATERWAY FROM POLLUTION BY DEBRIS, SEDIMENT, OR OTHER FOREIGN MATERIAL OR FROM THE MANIPULATION OF EQUIPMENT AND/OR MATERIALS.
3. CONTRACTOR IS REQUIRED TO USE "BEST MANAGEMENT PRACTICES" COMPLIANT WITH THE "ALABAMA HANDBOOK FOR EROSION CONTROL AND STORMWATER MANAGEMENT ON CONSTRUCTION SITES AND URBAN AREAS", ALABAMA SOIL AND WATER CONSERVATION COMMITTEE, MONTGOMERY, ALABAMA, VOLUMES 1 & 2, LATEST EDITION, TO PREVENT SEDIMENT LADEN STORM WATER RUNOFF OR ERODED MATERIALS FROM LEAVING THE CONSTRUCTION SITE.
4. THE CONTRACTOR SHALL NOT RETURN DIRECTLY TO THE ADJACENT WATERWAY ANY EFFLUENT THAT HAS BEEN USED FOR WASH PURPOSES OR OTHER SIMILAR OPERATIONS WHICH MAY CAUSE THIS WATER TO BECOME POLLUTED WITH SAND, SILT, CEMENT, OIL, OR OTHER IMPURITIES. SHOULD WATER BE SO USED ON SITE FOR CONSTRUCTION PURPOSES, THE CONTRACTOR SHALL CONTROL THE DISCHARGE OF SUCH WATER THROUGH THE USE OF WHATEVER DEVICES NECESSARY TO PROTECT AND MAINTAIN WATER QUALITY, TO SUSTAIN FISH LIFE, AND OTHERWISE PROTECT THE ENVIRONMENT.
5. THE CONTRACTOR SHALL BEAR FULL RESPONSIBILITY FOR CLEANUP OF ANY MATERIALS DEPOSITED OUTSIDE THE WORK AREA.
6. THE CONTRACTOR SHALL SUBMIT A PROPOSED ENVIRONMENTAL PROTECTION AND WATER CONTROL PLAN TO THE ENGINEER FOR APPROVAL BEFORE WORK IS STARTED. SAID PLAN SHALL INCLUDE PROCEDURES FOR ENVIRONMENTAL PROTECTION AND WATER CONTROL IN RELATION TO DEMOLITION AND REMOVAL ACTIVITIES, CONSTRUCTION AND INSTALLATIONS, COORDINATION WITH OTHER WORK IN PROGRESS, A DESCRIPTION OF METHODS AND EQUIPMENT TO BE USED FOR EACH OPERATION, AND OF SEQUENCE OF OPERATIONS.
7. THE CONTRACTOR SHALL ABIDE BY ALL ENVIRONMENTAL PROTECTION REQUIREMENTS AND OTHER STIPULATIONS AND CONDITIONS STATED IN THE ALABAMA CODE, INCLUDING BUT NOT LIMITED TO THOSE CONCERNING CONFORMANCE WITH PLANS, MATERIAL DISPOSAL, MATERIAL AND EQUIPMENT STORAGE, SPILL REPORTING, PRECAUTIONS AGAINST CONTAMINATION OF WATERS, SEDIMENT AND EROSION CONTROL AND ALL OTHER SPECIAL CONDITIONS.

RECOMMENDED SEQUENCE OF CONSTRUCTION:

WEST CELL WEIR BOX SEQUENCE OF CONSTRUCTION

1. INSTALL EROSION AND SEDIMENT CONTROL (ESC) DEVICES AND ANY OTHER ENVIRONMENTAL CONTROLS IN ACCORDANCE WITH ADEM GUIDELINES.
2. CLEAR AND GRUB AS NECESSARY IN AREA FOR DIKE FILL, NEW WEIR BOX INSTALLATION AND NEW JUNCTION BOX INSTALLATION.
3. CONSTRUCT BASE DIKE WIDENING AS NEEDED TO CONNECT TO EXISTING DIKE ROAD.
4. PERFORM EARTHWORK TO PREPARE SITE FOR FOUNDATION CONSTRUCTION.
5. CONSTRUCT CONCRETE FOUNDATION.
6. INSTALL NEW WEIR BOX.
7. INSTALL NEW JUNCTION BOX. EXCAVATE TO EXPOSE EXISTING PIPES. CUT PIPES AS NEEDED AND REMOVE PIPE SECTIONS WHERE NEW JUNCTION BOX IS TO BE INSTALLED. CONSTRUCT THE NEW JUNCTION BOX AND CONNECT EXISTING PIPES TO NEW JUNCTION BOX.
8. EXCAVATE TRENCH AND INSTALL NEW PIPES CONNECTING NEW WEIR BOX TO NEW JUNCTION BOX.
9. DEMOLISH AND REMOVE EXISTING WEIR BOX AND PIPES.
10. REPLACE SOIL AND DIKE ROAD WHERE THE TRENCH WAS EXCAVATED.
11. CONSTRUCT DIKE TO ELEVATION +70 FT NAVD88.
12. REMOVE EROSION AND SEDIMENT CONTROL DEVICES.

EAST CELL WEIR BOX SEQUENCE OF CONSTRUCTION

1. INSTALL EROSION AND SEDIMENT CONTROL (ESC) DEVICES AND ANY OTHER ENVIRONMENTAL CONTROLS IN ACCORDANCE WITH ADEM GUIDELINES.
2. CLEAR AND GRUB AS NECESSARY IN AREA FOR DIKE FILL AND WEIR BOX INSTALLATION.
3. CONSTRUCT BASE DIKE WIDENING AS NEEDED TO CONNECT TO EXISTING ROAD.
4. PERFORM EARTHWORK TO PREPARE SITE FOR FOUNDATION CONSTRUCTION.
5. CONSTRUCT CONCRETE FOUNDATION.
6. REMOVE AND SALVAGE EXISTING WEIR BOX SUPERSTRUCTURE AND PLACE ON SITE AS DIRECTED BY ASPA. LEAVE EXISTING CONCRETE FOUNDATION AND PIPE FLANGE CONNECTION IN PLACE.
7. INSTALL NEW WEIR BOX.
8. INSTALL NEW PIPES CONNECTING NEW PIPES TO EXISTING PIPES AT FLANGE.
9. CONSTRUCT DIKE TO ELEVATION +70 FT NAVD88.
10. REMOVE EROSION AND SEDIMENT CONTROL DEVICES.

ISSUED FOR BID
ISSUED: 2025-04-04
NOT TO BE USED FOR CONSTRUCTION

ALABAMA PORT AUTHORITY
PORT OF MOBILE

Mark	Description	Date	Appr

BLAKELEY / MUD LAKES
WEIR BOXES PROJECT

INDEX OF DRAWINGS, GENERAL NOTES, AND SEQUENCE OF CONSTRUCTION

Rev:
Date: 2025-04-04
M&N Project No. 212511-04
Designed by: PWK
Drawn by: HR
Checked by: PGV
Drawing code:
Reviewed by: MR
Submitted by: SUBMITTER'S NAME MOFFATT & NICHOL
Drawing Scale:
Plot scale: 1:1 (0 SHEET)

moffatt & nichol
11 N. WATER ST., SUITE 20220
MOBILE, AL 36602
251-378-9000
WWW.MOFFATTNICHOL.COM

250 N. WATER STREET
MOBILE, AL 36602
ALABAMA PORT AUTHORITY
PORT OF MOBILE

ALABAMA LICENSED No. 50467 PROFESSIONAL ENGINEER PETER WILLIAM KOTULAK
SEAL
Peter W. Kotulak
2025.04.04
11:13:01-04'00'

Sheet Reference No.
G-002
INDEX: 2 OF 22

File: Q:\BR\212511-04\20 CADD_Active_SheetSet Blakeley Weir Box\212511-04-WB-G-002 ; Plotted: 4/4/2025 11:02 AM by VOELKER, PAUL ; Saved: 3/28/2025 3:47 PM by VMORENO

DRAWING SCALES SHOWN BASED ON 22"x34" DRAWING

ABBREVIATIONS

ABBR	ABBREVIATION
ABUT	ABUTMENT
ABV	ABOVE
APPROX	APPROXIMATE
ASTM	AMERICAN SOCIETY FOR TESTING AND MATERIALS
BC	BEGIN CURVE or BARE COPPER
BL	BASELINE
BM	BENCH MARK
BOT	BOTTOM
BVC	BEGIN VERTICAL CURVE
C	CONDUIT or CONTROL
CAB	CRUSHED AGGREGATE BASE
CB	CATCH BASIN
CF	CUBIC FEET
CL	CENTERLINE
CLR	CLEAR
CMP	CORRUGATED METAL PIPE
CMU	CONCRETE MASONRY UNIT
CONC	CONCRETE
CONST	CONSTRUCTION
CONT	CONTINUOUS or CONTINUE
COORD	COORDINATE
CU	CUBIC or COPPER
DACS	DRAWING AREA COORDINATE SYSTEM
DET	DETAIL
DIA	DIAMETER
DIM	DIMENSION
DMMA	DREDGED MATERIAL MANAGEMENT AREA
DN	DOWN
DWGS	DRAWINGS
E	EAST
EA	EACH
EC	END CURVE
EF	EACH FACE
EG	EXISTING GROUND
EL	ELEVATION
ELECT	ELECTRICAL
ELEV	ELEVATION
EP	EDGE OF PAVEMENT
EQUIP	EQUIPMENT
ES	EACH SIDE
EVC	END VERTICAL CURVE
EW	EACH WAY or EXISTING WATER
EXIST. /EX	EXISTING
EXP	EXPANSION
EXT	EXTERIOR
FG	FINAL GRADE, FINISHED GRADE or FINISHED GROUND
FH	FIRE HYDRANT
FT	FOOT or FEET
FTG	FOOTING
GAL	GALLON
GALV	GALVANIZED
GB	GRADE BREAK
GND	GROUND
GPM	GALLONS PER MINUTE
H	HEIGHT
HORIZ	HORIZONTAL
ID	INSIDE DIAMETER
IN.	INCHES
INV	INVERT
IPS	INSIDE PIPE SIZE
JB	JUNCTION BOX
JS	JUNCTION STRUCTURE
JT	JOINT
KSI	KIPS PER SQUARE INCH
L	LENGTH
LA	LIGHTING ARRESTOR
LAT	LATERAL
LB	POUND
LF	LINEAR or LINEAL FEET
LG	LONG
MATL	MATERIAL
MAX	MAXIMUM
MH	MANHOLE
MHW	MEAN HIGH WATER
MHHW	MEAN HIGHER HIGH WATER
MIN	MINIMUM
MLW	MEAN LOW WATER
MLLW	MEAN LOWER LOW WATER
MON	MONUMENT
MSL	MEAN SEA LEVEL
N	NORTH
NAVD	NORTH AMERICAN VERTICAL DATUM
NGVD	NATIONAL GEODETIC VERTICAL DATUM
NIC	NOT IN CONTRACT
NO.	NUMBER
NTS	NOT TO SCALE
OBS	OBSTRUCTION
OC	ON CENTER
OD	OUTSIDE DIAMETER
OG	ORIGINAL GRADE
OH	OVERHEAD
PC	POINT OF CURVATURE
PCF	POUND PER CUBIC FOOT
PI	POINT OF INTERSECTION
PL	PLATE or PROPERTY LINE
POC	POINT ON CURVE
POT	POINT ON TANGENT
POV	POINT ON VERTICAL CURVE
PRC	POINT OF REVERSE CURVE
PRESS	PRESSURE
PRI	PRIMARY
PRVC	POINT OF REVERSE VERTICAL CURVE
PSF	POUNDS PER SQUARE FOOT
PSI	POUNDS PER SQUARE INCH
PSIG	POUNDS PER SQUARE INCH GAGE
PT	POINT or POINT OF TANGENCY
PVC	POINT OF VERTICAL CURVATURE
PVI	POINT OF VERTICAL INTERSECTION
PVMT	PAVEMENT
PVT	POINT OF VERTICAL TANGENCY
R	RADIUS
RAD	RADIUS
REQD	REQUIRED
ROW	RIGHT OF WAY
RT	RIGHT
SCH	SCHEDULE
SD	STORM DRAIN
SF	SQUARE FOOT or FEET
SHT	SHEET
SIM	SIMILAR
SPECS	SPECIFICATIONS
SQ	SQUARE
STA	STATION
STD	STANDARD
STRUCT	STRUCTURE or STRUCTURAL
SYM	SYMMETRICAL
T	TANGENT
T&B	TOP AND BOTTOM
TC	TOP OF CURB
TEMP	TEMPERATURE or TEMPORARY
THRU	THROUGH
TOS	TOP OF STEEL
TOT	TOTAL
TRANSV	TRANSVERSE
TW	TOP OF WALL
TYP	TYPICAL
UTIL	UTILITY
VAR	VARIES
VERT	VERTICAL
W	WATER, WEST, WIDE or WIRE
WT	WEIGHT
WWF	WELDED WIRE FABRIC

LEGEND

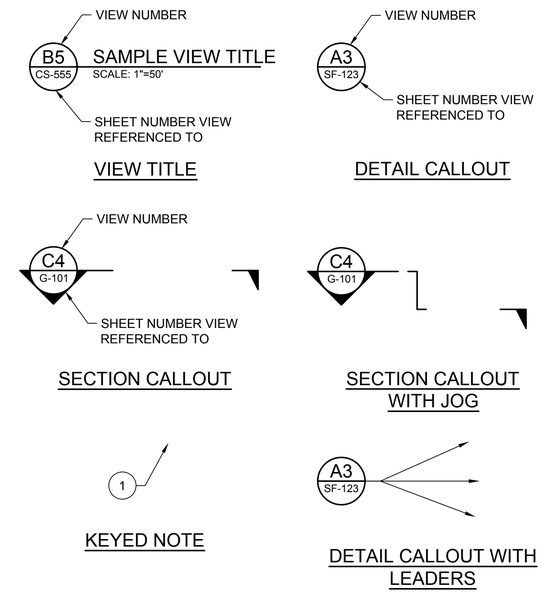

* VIEW NUMBER IS BASED ON THE (DACS) LOCATION OF THE LOWER-LEFT EXTENTS OF THE VIEW ON THE REFERENCED SHEET. WHEN REFERENCING DRAWING INFORMATION BETWEEN SHEETS, BOTH THE VIEW AND SHEET NUMBERS MUST BE QUOTED TOGETHER - EITHER IN A CALLOUT FORMAT AS SHOWN ABOVE OR IN THE FORM;
"VIEW NO./SHEET NO." (EG A1/CS-5001)

SHEET TYPE DESIGNATORS	
0	GENERAL (COVER SHEET, LEGEND, NOTES)
1	PLANS (HORIZONTAL VIEWS)
2	ELEVATIONS (NOT TYPICALLY USED)
3	SECTIONS (OVERALL VIEWS)
4	LARGE-SCALE VIEWS (PLANS, SECT. OR ELEV. - NOT DETAILS)
5	DETAILS (MAY BE PLAN, SECT. OR ELEV. VIEWS)
6	SCHEDULES
7	USER DEFINED
8	USER DEFINED
9	3D ISOMETRIC

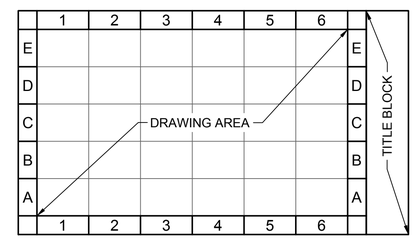

DRAWING AREA COORDINATE SYSTEM (DACS)

DISCIPLINE DESIGNATORS	
DISCIPLINE	DESIGNATOR
GENERAL	G
SURVEY/MAPPING	V
GEOTECHNICAL	B
CIVIL WORKS	W
CIVIL	C
STRUCTURAL	S
MECHANICAL	M
ELECTRICAL	E
OTHER DISCIPLINES	X

SECONDARY DESIGNATORS	
DEMOLITION	D
GENERAL	G
SUBSTRUCTURE	B
FRAMING	F
COMPONENT	C
SITE	S

REVISION NUMBERING	
A00, A01...	PRE-BID SUBMITTALS
B00, B01...	BID SUBMITTALS
000, 001...	CONSTRUCTION SUBMITTALS

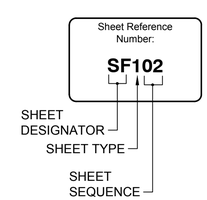

SHEET NUMBERING

ISSUED FOR BID
ISSUED: 2025-04-04
NOT TO BE USED FOR CONSTRUCTION

ALABAMA PORT AUTHORITY
PORT OF MOBILE

Mark	Description	Date	Appr.

BLAKELEY / MUD LAKES
WEIR BOXES PROJECT

LEGEND AND ABBREVIATIONS

Date: 2025-04-04 | Rev.
M&N Project No. 212511-04
Designed by: PWK | Drawn by: HR | Cad by: PGV
Drawing scale:
Reviewed by: MR
Submitted by: SUBMITTER'S NAME MOFFATT & NICHOL
Drawing Scale: 1:1 (D SHEET)
Plot scale: 1:1 (D SHEET)

moffatt & nichol
11 N. WATER ST., SUITE 20220
MOBILE, AL 36602
251-375-9000
WWW.MOFFATTNICHOL.COM

250 N. WATER STREET
MOBILE, AL 36602
ALABAMA PORT AUTHORITY
PORT OF MOBILE

ALABAMA LICENSED No. 50467 PROFESSIONAL ENGINEER PETER W. KOTULAK
Peter W. Kotulak
2025.04.04
SEAL 11:13:01-04'00'

Sheet Reference No.
G-003
INDEX: 3 OF 22

File: Q:\BR\212511-04\20 CADD_Active_SheetSet Blakeley Weir Box\212511104-WB-G-003 ; Plotted: 4/4/2025 11:02 AM by VOELKER, PAUL ; Saved: 3/6/2025 3:32 PM by TOCOOPER

DRAWING SCALES SHOWN BASED ON 22"x34" DRAWING

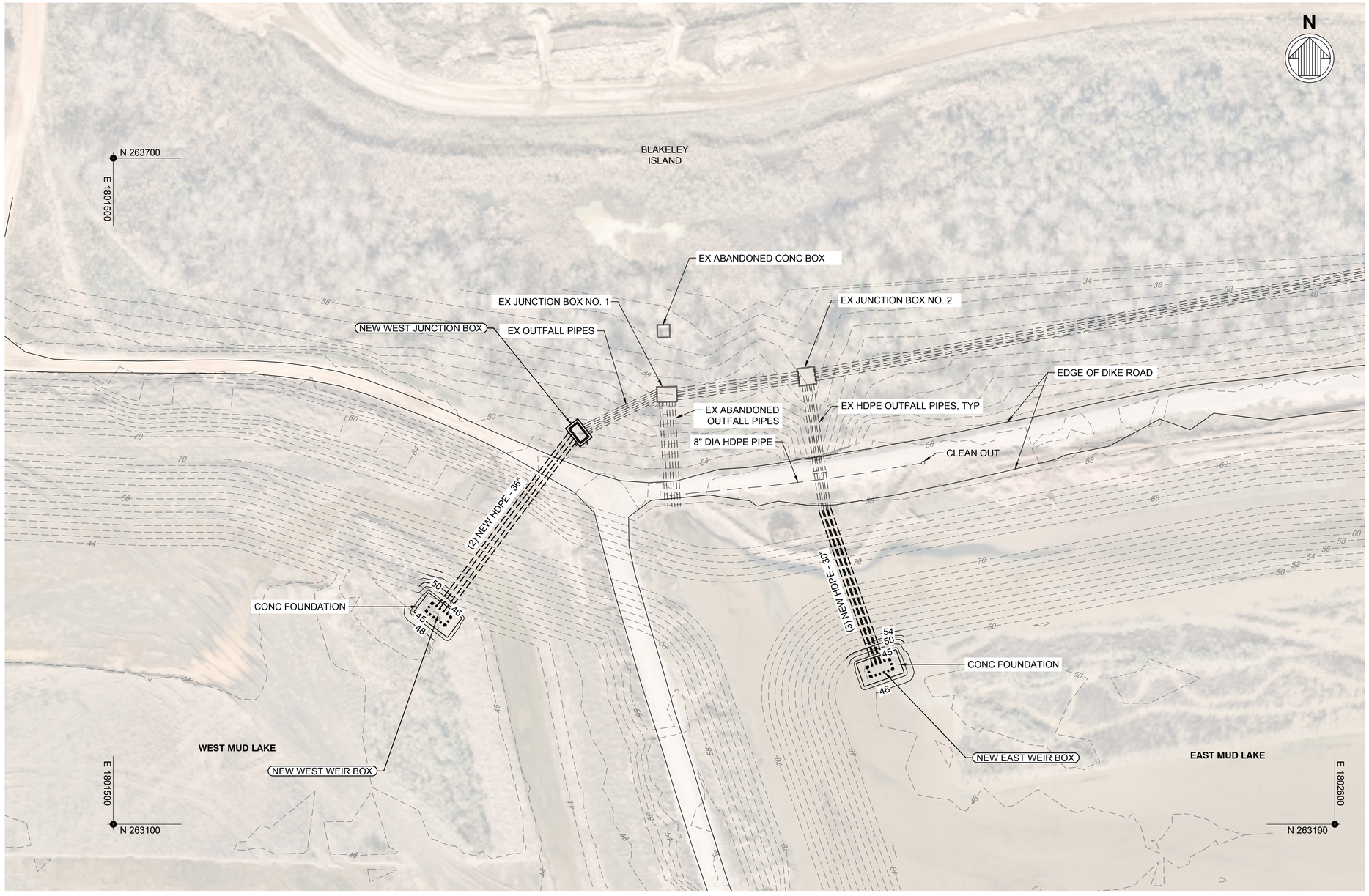

A1 G-101 PLAN - GENERAL ARRANGEMENT
SCALE: 1" = 50'

NOTES

1. FOR GENERAL NOTES AND SEQUENCE OF CONSTRUCTION, SEE SHEET G-002.
2. FOR LEGEND AND ABBREVIATIONS, SEE SHEET G-003.
3. SEE SHEET S-504 FOR THE NEW JUNCTION BOX DETAILS.

50' 0' 50' 100'
SCALE: 1"=50'

ISSUED FOR BID
ISSUED: 2025-04-04
NOT TO BE USED FOR CONSTRUCTION

ALABAMA PORT AUTHORITY
PORT OF MOBILE

Mark	Description	Date	Appr.

BLAKELEY / MUD LAKES WEIR BOXES PROJECT

PLAN - GENERAL ARRANGEMENT

Designed by: PWK
Dwn by: HR
Ckd by: PGV
Reviewed by: MR
Submitted by: SUBMITTER'S NAME MOFFATT & NICHOL
Date: 2025-04-04
Rev.
M&N Project No. 212511-04
Drawing code:
Drawing Scale:
Plot scale: 1:1 (D SHEET)

moffatt & nichol
11 N. WATER ST., SUITE 20220
MOBILE, AL 36602
251-378-9000
WWW.MOFFATTNICHOL.COM

250 N. WATER STREET
MOBILE, AL 36602
ALABAMA PORT AUTHORITY
PORT OF MOBILE

ALABAMA LICENSED No. 50467 PROFESSIONAL ENGINEER WILLIAM KOTULAK
SEAL
Peter W. Kotulak
2025.04.04
11:13:02-04'00'

Sheet Reference No.
G-101
INDEX: 4 OF 22

File: Q:\BR\212511-04\20 CADD_Active_Sheets\Blakeley Weir Box\212511-04-WB-G-101 , Plotted: 4/4/2025 11:02 AM by VOELKER, PAUL , Saved: 3/6/2025 3:43 PM by TOCOOPER

DRAWING SCALES SHOWN BASED ON 22"x34" DRAWING

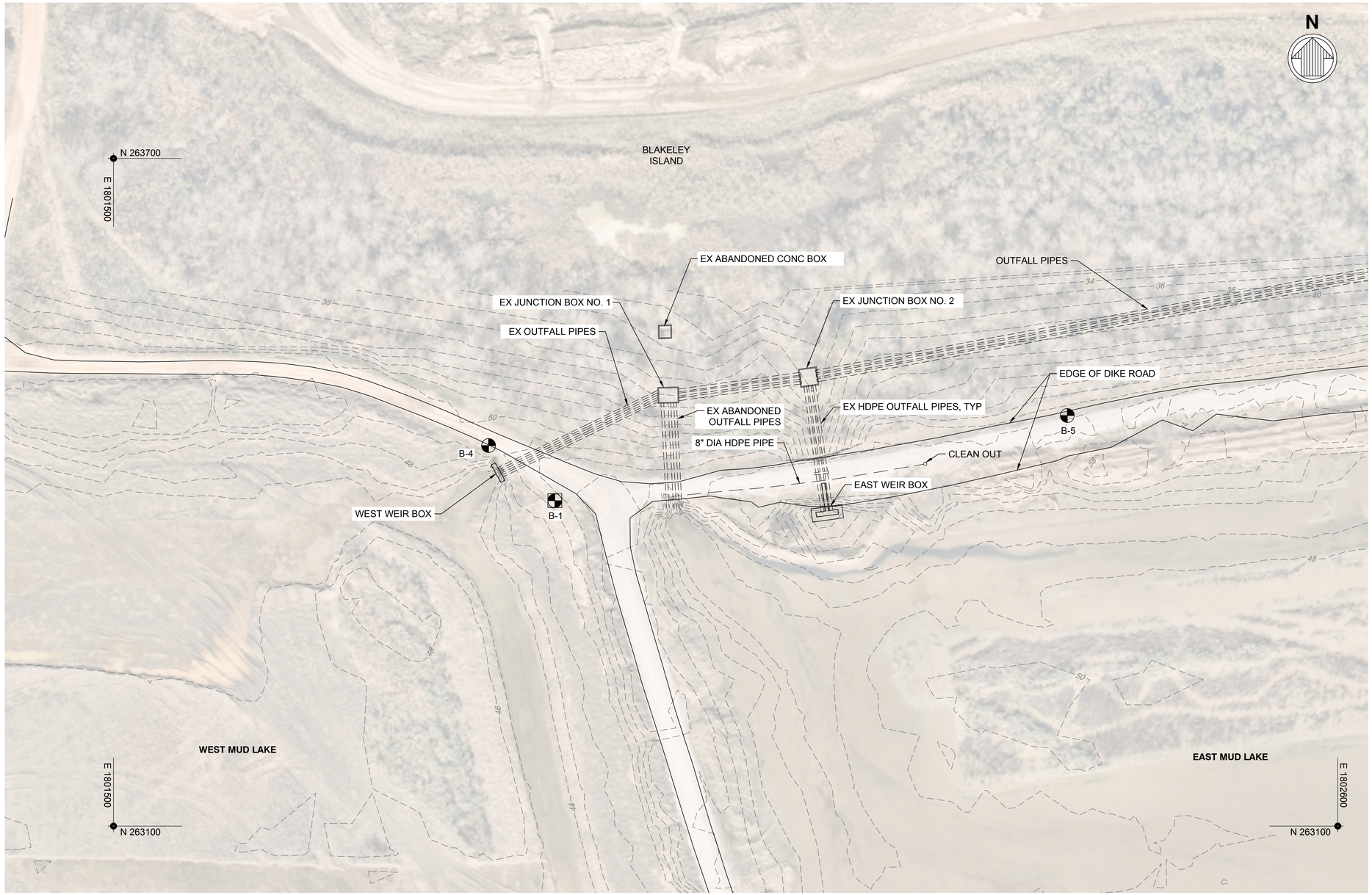

NOTES

1. FOR GENERAL NOTES AND SEQUENCE OF CONSTRUCTION, SEE SHEET G-002.
2. FOR LEGEND AND ABBREVIATIONS, SEE SHEET G-003.
3. EXISTING CONDITION SHOWN.

LEGEND

BORING PERFORMED BY GEOTECHNICAL ENGINEERING TESTING IN 2024

BORING PERFORMED BY THOMPSON ENGINEERING TESTING IN 2024

BORING TABLE		
POINT #	NORTHING	EASTING
B-1	263392.46	1801896.53
B-4	263442.00	1801837.00
B-5	263469.00	1802357.00

A1 / B-101 PLAN - BORING LOCATIONS
SCALE: 1" = 50'

50' 0' 50' 100'
SCALE: 1"=50'

ISSUED FOR BID
ISSUED: 2025-04-04
NOT TO BE USED FOR CONSTRUCTION

ALABAMA PORT AUTHORITY
PORT OF MOBILE

Mark	Description	Date	Appr

BLAKELEY / MUD LAKES WEIR BOXES PROJECT

PLAN - BORING LOCATIONS

Designed by: PWK
Date: 2025-04-04
Rev.
Dwn by: HR
Ckd by: PGV
M&N Project No. 212511-04
Reviewed by: MR
Drawing code:
Submitted by: SUBMITTER'S NAME MOFFATT & NICHOL
Drawing Scale:
Plot scale: 1:1 (D SHEET)

moffatt & nichol
11 N. WATER ST., SUITE 20220
MOBILE, AL 36602
251-375-9000
WWW.MOFFATTNICHOL.COM

250 N. WATER STREET
MOBILE, AL 36602
ALABAMA PORT AUTHORITY
PORT OF MOBILE

ALABAMA LICENSED No. 50467 PROFESSIONAL ENGINEER PETER W. KOTULAK
Peter W. Kotulak
2025.04.04
SEAL 11:13:03-04'00'

Sheet Reference No.
B-101
INDEX: 5 OF 22

File: Q:\BR\212511-04\20 CADD_Active_Sheet\Set Blakeley Weir Box\212511-04-WB-B-101 ; Plotted: 4/4/2025 11:03 AM by VOELKER, PAUL ; Saved: 2/27/2025 3:16 PM by TOCOOPER

DRAWING SCALES SHOWN BASED ON 22"x34" DRAWING

PROJECT NAME: ASPA SPOIL BASIN EXPANSION
G.E.T. PROJ. NUMBER: 24-110
PROJECT LOCATION: MOBILE, AL
DRILL RIG: MOBILE B37
DRILL METHOD: MUD ROTARY
DRILL CREW: ES, BT, PH(LOGGER)

DATE DRILLED: 4/5/24
BORING DEPTH: 100 FT.
BORING ELEV.:
DATUM:
WATER DEPTH:
REMARKS:

GEOTECHNICAL ENGINEERING TESTING, INC.

BORING NUMBER: B-4
BORING LOCATION:

DEPTH IN FEET	LOG	DESCRIPTION	SAMPLE NO.	S.P.T. N_1	S.P.T. N_2	W.C. %	ATTERBERG LIMITS L.L.	ATTERBERG LIMITS P.I.	DRY UNIT WT. pcf	% MINUS #200	SHEAR STRENGTH tsf	UNIFIED CLASS
0		Loose brown silty sand with organics	1	7								
			2	6								
			3	7								
5		Loose red silty clayey sand	4	8								
			5	4		19				21.7		
			6	6								
10		Loose brown fine to medium grained sand with gravel	7	10								
			8	9								
15		Loose red clayey sand	9	5								
		Medium consistency red sandy clay	10	5								
20												
			11	1		36	30	30		40.9		SM
25		Very soft red sandy clay										
			12	0		68				96.4		
30												
			13	0								
35												
			14	2		63						
40		Very soft red clay										
			15	0								
45												
			16	0		68				98.3		
50												

NOTE: The stratification lines shown represent the approximate boundary between soil types and the transition may be gradual. The groundwater level stated is for conditions at the time of boring and the level may fluctuate large amounts for other conditions or seasons.

Reviewed By:

MOD DEEP BORING LOG NO NC VALUES 24-110 ASPA SPOIL BASIN EXPANSION.GPJ \GET\ AL.GDT 6/14/24

DRAFT

PROJECT NAME: ASPA SPOIL BASIN EXPANSION
G.E.T. PROJ. NUMBER: 24-110
PROJECT LOCATION: MOBILE, AL
DRILL RIG: MOBILE B37
DRILL METHOD: MUD ROTARY
DRILL CREW: ES, BT, PH(LOGGER)

DATE DRILLED: 4/5/24
BORING DEPTH: 100 FT.
BORING ELEV.:
DATUM:
WATER DEPTH:
REMARKS:

GEOTECHNICAL ENGINEERING TESTING, INC.

BORING NUMBER: B-4
BORING LOCATION:

DEPTH IN FEET	LOG	DESCRIPTION	SAMPLE NO.	S.P.T. N_1	S.P.T. N_2	W.C. %	ATTERBERG LIMITS L.L.	ATTERBERG LIMITS P.I.	DRY UNIT WT. pcf	% MINUS #200	SHEAR STRENGTH tsf	UNIFIED CLASS
50												
55		Very soft red clay	17	2								
60			18	2		70				98.8		
65		Loose grayish brown silty clayey sand	19	4		24				28.5		
70		Loose gray clayey sand	20	4								
75			21	0								
80		Very loose grayish brown silty sand	22	0		25				30.6		
85			23	2								
90			24	2								
95												
100		B.T. @ 100 FT										

NOTE: The stratification lines shown represent the approximate boundary between soil types and the transition may be gradual. The groundwater level stated is for conditions at the time of boring and the level may fluctuate large amounts for other conditions or seasons.

Reviewed By:

MOD DEEP BORING LOG NO NC VALUES 24-110 ASPA SPOIL BASIN EXPANSION.GPJ \GET\ AL.GDT 6/14/24

DRAFT

thompson ENGINEERING

Mud Lakes Weir Box — **B-1**

30.72311, -88.02992 — Page 1 of 1

Drilling Co.:	Thompson Engineering	Project No.:	24-1101-0054 (Task 1)
Driller:	Stan White	Date Drilled:	06/11/2024
Logged By:	Stan White	Boring Depth:	37'
Equipment:	TMG174	Boring Elevation:	~50.786'
Hammer Type:	Auto	Coordinates:	30.723151, -88.030219
Drilling Method:	Mud Rotary	Water Level At Time Of Drilling:	N/A
		Cave-in At Time Of Drilling:	N/A

Remarks:

Delayed Water Level: N/A
Delayed Water Observation Date: N/A

Depth (ft)	Elevation (ft)	Graphic Log	Visual Classification and Remarks	Samples: Sample Number	Samples: Sample Graphic	Samples: Blow Counts (N-Value)	Lab: Moisture Content (%)	Lab: Atterberg Limits (LL-PL-PI)	Lab: % Fines
	50.8								
	50		Brownish black, moist, **Fat Clay** (CH)	S1		WOH-WOH-WOH-WOH (-2)			
			Dark brownish black, wet, **Fat Clay** (CH)	S2		1-1-1-2 (2)	55	51-27-24	
5	45			S3		WOH-WOH-1-1 (0)			
			Light grey, moist, **Fat Clay** (CH)	S4		WOH-1-1-2 (2)	52	84-46-38	
			Brownish grey, moist, **Fat Clay** (CH)	S5		WOH-WOH-WOH-WOH (WOH)			
10	40		Brownish red, moist, fine to medium grained, **Clayey Sand** (SC)	S6		WOH-1-1-2 (2)	28	24-18-6	32
				S7		WOH-WOH-WOH-WOH (WOH)			
				S8		2-3-6-8 (9)			
15	35		Brownish red, wet, **Sandy Silt** (ML)	S9		2-4-2-1 (6)			
				S10		3-1-1-1 (2)	56	39-33-6	68
20	30								
				S11		1-WOH-WOH-WOH (WOH)			
25	25		Red, wet, **Silt** with **Sand** (ML)						
				S12		1-WOH-WOH-WOH (WOH)			
30	20								
35	15			S13		1-WOH-WOH-WOH (WOH)			75
			End of Boring, backfilled with bentonite chips						

CH | SC | ML | SPT

Thompson Engineering | 2970 Cottage Hill Road | Mobile, AL | +1 (251) 666-2443 | https://www.thompsonengineering.com

Page 1 of 1

PROJECT NAME: ASPA SPOIL BASIN EXPANSION
G.E.T. PROJ. NUMBER: 24-110
PROJECT LOCATION: MOBILE, AL
DRILL RIG: MOBILE B37
DRILL METHOD: MUD ROTARY
DRILL CREW: ES, BT, PH(LOGGER)

DATE DRILLED: 4/7/24
BORING DEPTH: 90 FT.
BORING ELEV.:
DATUM:
WATER DEPTH:
REMARKS:

GEOTECHNICAL ENGINEERING TESTING, INC.

BORING NUMBER: B-5
BORING LOCATION:

DEPTH IN FEET	LOG	DESCRIPTION	SAMPLE NO.	S.P.T. N_1	S.P.T. N_2	W.C. %	ATTERBERG LIMITS L.L.	ATTERBERG LIMITS P.I.	DRY UNIT WT. pcf	% MINUS #200	SHEAR STRENGTH tsf	UNIFIED CLASS
0		Firm brown silty sand and gray gravel	1	22								
			2	25								
		Firm dark brown clayey sand	3	24								
5			4	24								
			5	6		19				30.4		
		Loose red clayey sand	6	7								
10			7	3								
		Very loose brown silty sand	8	4		35				10.0		
15			9	4								
		Firm light reddish brown silty sand with geotextile	10	16								
20												
		Firm light reddish brown silty sand	11	15								
25												
		Very soft red clay	12	1/18"		63						
30												
			13	2								
35												
		Soft red sandy clay	14	3		47				64.3		
40												
			15	4								
45												
		Very soft red clay	16	0		56	61	32		94.4	c*=0.13	CH
50												

NOTE: The stratification lines shown represent the approximate boundary between soil types and the transition may be gradual. The groundwater level stated is for conditions at the time of boring and the level may fluctuate large amounts for other conditions or seasons.

Reviewed By:

MOD DEEP BORING LOG NO NC VALUES 24-110 ASPA SPOIL BASIN EXPANSION.GPJ \GET\ AL.GDT 6/14/24

DRAFT

PROJECT NAME: ASPA SPOIL BASIN EXPANSION
G.E.T. PROJ. NUMBER: 24-110
PROJECT LOCATION: MOBILE, AL
DRILL RIG: MOBILE B37
DRILL METHOD: MUD ROTARY
DRILL CREW: ES, BT, PH(LOGGER)

DATE DRILLED: 4/7/24
BORING DEPTH: 90 FT.
BORING ELEV.:
DATUM:
WATER DEPTH:
REMARKS:

GEOTECHNICAL ENGINEERING TESTING, INC.

BORING NUMBER: B-5
BORING LOCATION:

DEPTH IN FEET	LOG	DESCRIPTION	SAMPLE NO.	S.P.T. N_1	S.P.T. N_2	W.C. %	ATTERBERG LIMITS L.L.	ATTERBERG LIMITS P.I.	DRY UNIT WT. pcf	% MINUS #200	SHEAR STRENGTH tsf	UNIFIED CLASS
50												
55		Very soft red clay	17	1								
60			18	2		65						
65			19	0							c*=0.25	
70			20	15		21				18.6		
75			21	17								
80		Firm dark brown silty sand with mica	22	16								
85			23	19								
90			24	20								
95		B.T. @ 90 FT										
100												

NOTE: The stratification lines shown represent the approximate boundary between soil types and the transition may be gradual. The groundwater level stated is for conditions at the time of boring and the level may fluctuate large amounts for other conditions or seasons.

Reviewed By:

MOD DEEP BORING LOG NO NC VALUES 24-110 ASPA SPOIL BASIN EXPANSION.GPJ \GET\ AL.GDT 6/14/24

DRAFT

NOTES:

1. SOIL BORING LOGS ARE PROVIDED FOR INFORMATIONAL PURPOSES ONLY. FOR ADDITIONAL INFORMATION, SEE GEOTECHNICAL REPORT.
2. SOIL BORINGS REPRESENT SUBSURFACE INFORMATION ONLY AT THE LOCATION OF THE BORING AND ARE NOT INTENDED TO BE CONSIDERED TYPICAL BEYOND THE LIMITS OF THE BORING. THE CONTRACTOR SHOULD ANTICIPATE VARIABILITY IN THE SUBSURFACE CONDITIONS AND ALLOW FOR VARIATION IN PREPARATION OF THIS BID.

ISSUED FOR BID
ISSUED: 2025-04-04
NOT TO BE USED FOR CONSTRUCTION

ALABAMA PORT AUTHORITY
PORT OF MOBILE

Mark	Description	Date	Appr.

BLAKELEY / MUD LAKES WEIR BOXES PROJECT

PROFILE - BORING

Designed by: PWK	Date: 2025-04-04
Dwn by: HR	Ckd by: PGV
Reviewed by: MR	M&N Project No: 212511-04
Submitted by: SUBMITTER'S NAME MOFFATT & NICHOL	Drawing scale: Plot scale: 1:1 (0 SHEET)
	Drawing code:
	Rev.

moffatt & nichol
11 N. WATER ST., SUITE 20220
MOBILE, AL 36602
251-378-9000
WWW.MOFFATTNICHOL.COM

ALABAMA PORT AUTHORITY
250 N. WATER STREET
MOBILE, AL 36602

ALABAMA LICENSED No. 50467 PROFESSIONAL ENGINEER PETER WILLIAM KOTULAK
Peter W. Kotulak
2025.04.04
11:13:03-04'00'
SEAL

Sheet Reference No.
B-201
INDEX: 6 OF 22

File: Q:\BR\212511-04\20 CADD_Active_Sheet\Set Blakeley Weir Box\212511-04-WB-B-201 ; Plotted: 4/4/2025 11:03 AM by VOELKER, PAUL ; Saved: 2/20/2025 2:04 PM by HRIDQUANE

DRAWING SCALES SHOWN BASED ON 22"x34" DRAWING

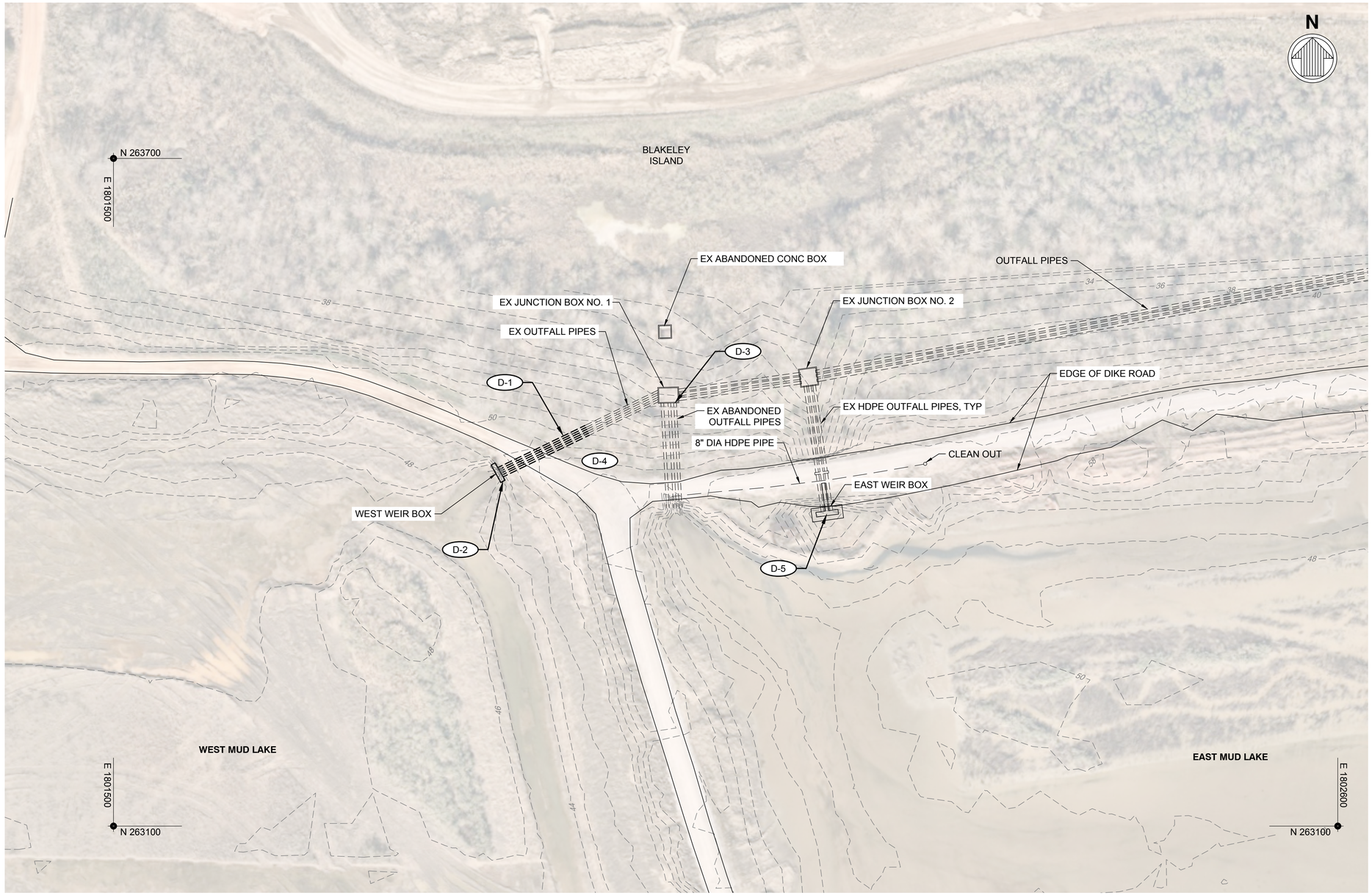

A1
C-101
PLAN - EXISTING CONDITION AND SITE PREPARATION
SCALE: 1" = 50'

NOTES

1. FOR GENERAL NOTES AND SEQUENCE OF CONSTRUCTION, SEE SHEET G-002.
2. FOR LEGEND AND ABBREVIATIONS, SEE SHEET G-003.

DEMOLITION NOTES:

- D-1 EXISTING THREE (3) 30" Ø OUTFALL PIPES TO BE REMOVED.
- D-2 EXISTING WEST WEIR BOX TO BE REMOVED.
- D-3 EXISTING THREE (3) 30" Ø ABANDONED OUTFALL PIPES TO BE PLUGGED WITH GROUT IN THE EXISTING JUNCTION BOX.
- D-4 CLEAR AND GRUB AS REQUIRED FOR PIPE REMOVAL, JUNCTION BOX INSTALLATION AND WEIR BOX INSTALLATION
- D-5 REMOVE AND SALVAGE EXISTING STEEL SUPERSTRUCTURE OF EAST WEIR BOX. CONCRETE FOUNDATION AND THREE (3) EXISTING HDPE PIPES TO REMAIN. THE EXISTING HDPE PIPE CONNECTIONS SHALL BE PROTECTED FOR REUSE.

50' 0' 50' 100'
SCALE: 1"=50'

ISSUED FOR BID
ISSUED: 2025-04-04
NOT TO BE USED FOR CONSTRUCTION

ALABAMA PORT AUTHORITY
PORT OF MOBILE

Mark	Description	Date	Appr

BLAKELEY / MUD LAKES WEIR BOXES PROJECT

PLAN - EXISTING CONDITION AND SITE PREPARATION

Designed by: PWK
Date: 2025-04-04
Rev.
Dwn by: HR
Ckd by: PGV
M&N Project No. 212511-04
Reviewed by: MR
Drawing code:
Submitted by: SUBMITTER'S NAME MOFFATT & NICHOL
Drawing Scale:
Plot scale: 1:1 (O SHEET)

moffatt & nichol
11 N. WATER ST., SUITE 20220
MOBILE, AL 36602
251-378-9000
WWW.MOFFATTNICHOL.COM

250 N. WATER STREET
MOBILE, AL 36602
ALABAMA PORT AUTHORITY
PORT OF MOBILE

ALABAMA LICENSED No. 50467 PROFESSIONAL ENGINEER PETER WILLIAM KOTULAK
SEAL
Peter W. Kotulak
2025.04.04
11:13:04-04'00'

Sheet Reference No.
C-101
INDEX: 7 OF 22

File: Q:\BR\212511-04\20 CADD_Active_Sheet\Set Blakeley Weir Box\212511-04-WB-C-101 - Plotted: 4/4/2025 11:03 AM by VOELKER, PAUL - Saved: 3/31/2025 10:29 AM by PVOELKER

DRAWING SCALES SHOWN BASED ON 22"x34" DRAWING

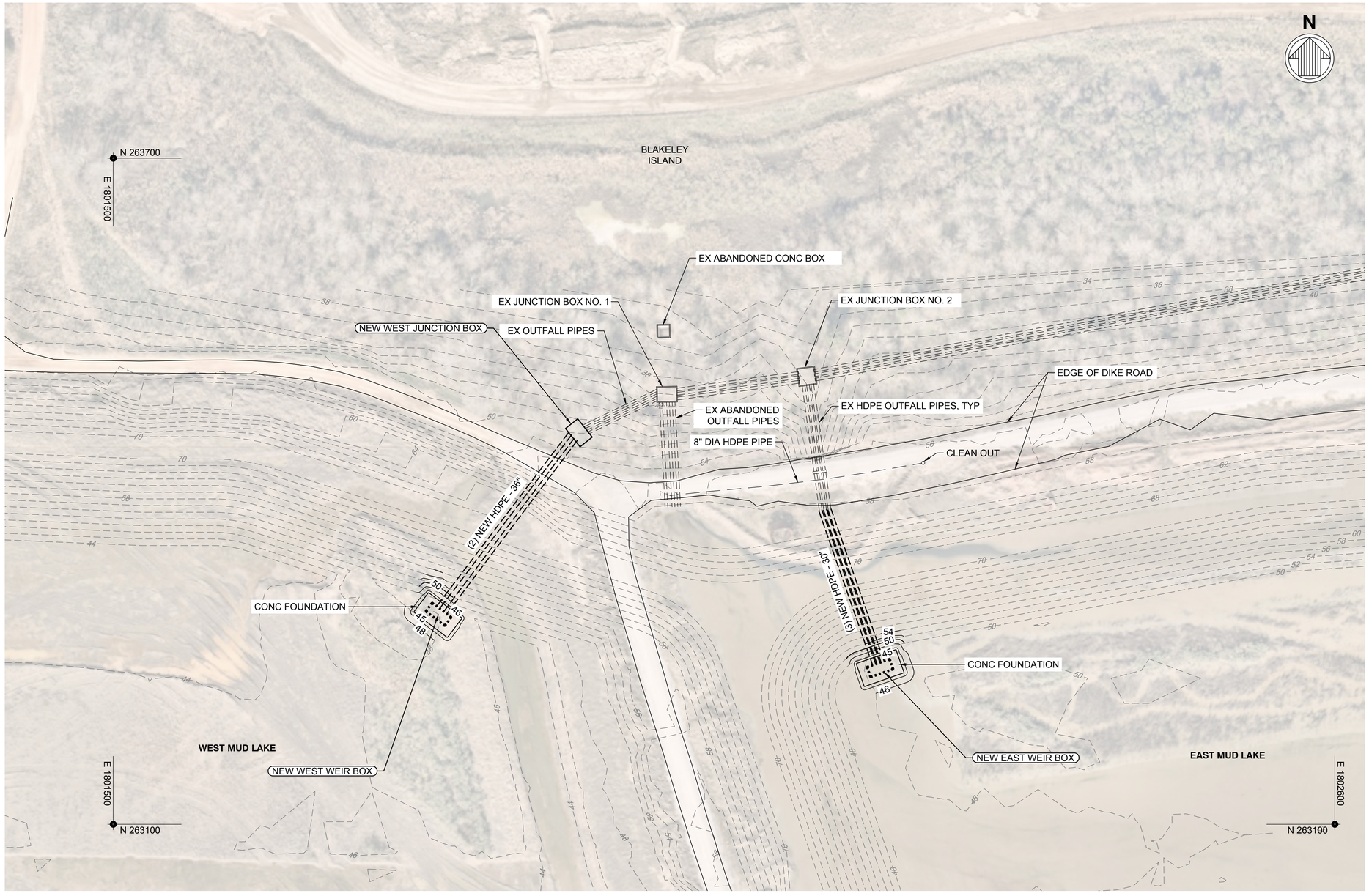

A1
C-102
PLAN - WEIR BOX AND PIPING LAYOUT
SCALE: 1" = 50'

NOTES

1. FOR GENERAL NOTES AND SEQUENCE OF CONSTRUCTION, SEE SHEET G-002.
2. FOR LEGEND AND ABBREVIATIONS, SEE SHEET G-003.

50' 0' 50' 100'
SCALE: 1"=50'

ISSUED FOR BID
ISSUED: 2025-04-04
NOT TO BE USED FOR CONSTRUCTION

ALABAMA PORT AUTHORITY
PORT OF MOBILE

Mark	Description	Date	Appr

BLAKELEY / MUD LAKES
WEIR BOXES PROJECT

PLAN - WEIR BOX AND PIPING LAYOUT

Designed by: PWK
Date: 2025-04-04
Rev.
Dwn by: HR
Ckd by: PGV
M&N Project No. 212511-04
Reviewed by: MR
Drawing code:
Submitted by: SUBMITTER'S NAME MOFFATT & NICHOL
Drawing Scale:
Plot scale: 1:1 (D SHEET)

moffatt & nichol
11 N. WATER ST., SUITE 20220
MOBILE, AL 36602
251-378-9000
WWW.MOFFATTNICHOL.COM

250 N. WATER STREET
MOBILE, AL 36602
ALABAMA PORT AUTHORITY
PORT OF MOBILE

ALABAMA LICENSED No. 50467 PROFESSIONAL ENGINEER WILLIAM KOTULAK
Peter W. Kotulak
2025.04.04
SEAL 11:13:04-04'00'

Sheet Reference No.
C-102
INDEX: 8 OF 22

File: Q:\BR\212511-04\20 CADD_Active_Sheets\Set Blakeley Weir Box\212511-04-WB-C-102 - Plotted: 4/4/2025 11:04 AM by VOELKER, PAUL - Saved: 2/20/2025 2:04 PM by PVOELKER

DRAWING SCALES SHOWN BASED ON 22"x34" DRAWING

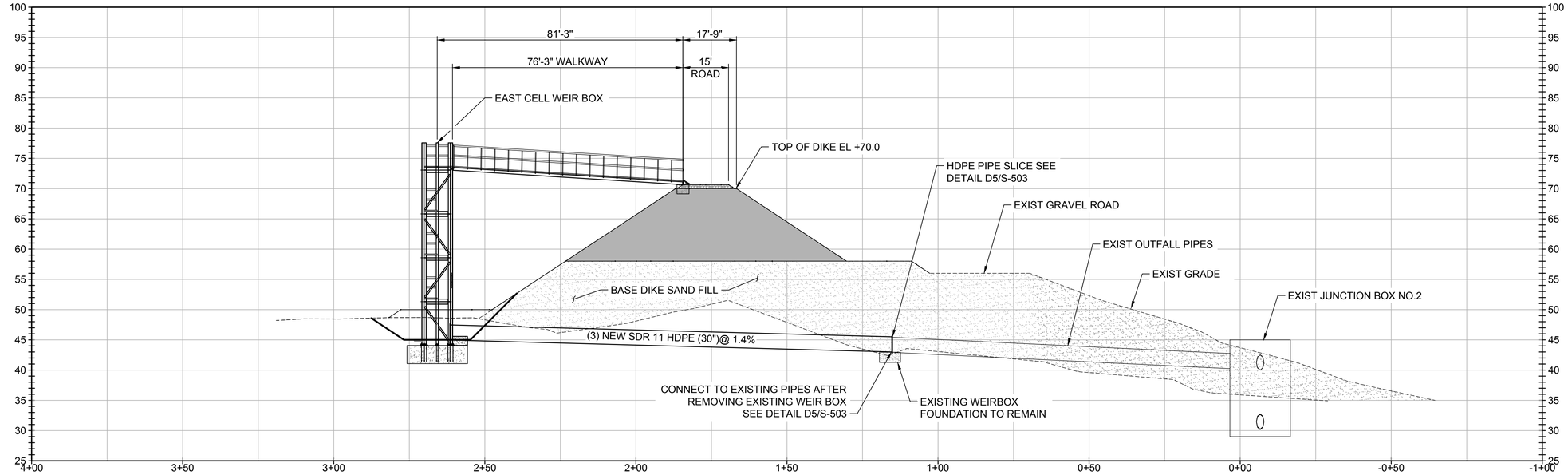

C1 / C-201 PROFILE - EAST WEIR BOX
SCALE: VERT 1"=10'
SCALE: HORZ 1"=20'

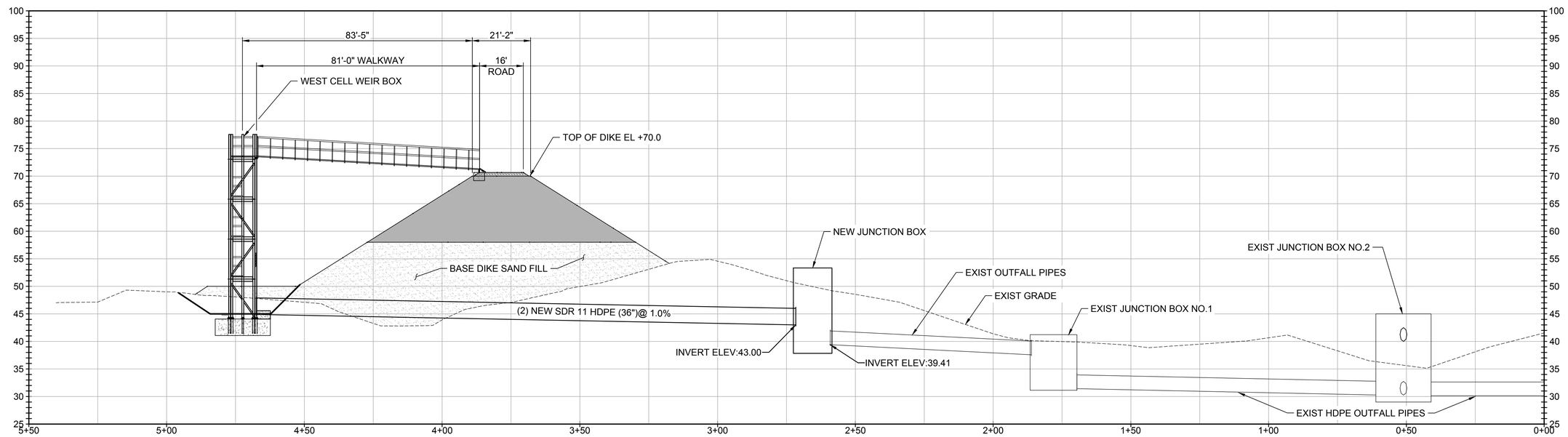

A1 / C-201 PROFILE - WEST WEIR BOX
SCALE: VERT 1"=10'
SCALE: HORZ 1"=20'

10' 0' 10' 20'
SCALE: 1"=10'

20' 0' 20' 40'
SCALE: 1"=20'

ISSUED FOR BID
ISSUED: 2025-04-04
NOT TO BE USED FOR CONSTRUCTION

ALABAMA PORT AUTHORITY
PORT OF MOBILE

Mark	Description	Date	Appr

BLAKELEY / MUD LAKES WEIR BOXES PROJECT

PROFILE - WEIR BOX

Designed by: PWK
Date: 2025-04-04
Rev.
Dwn by: HR
Ckd by: PGV
M&N Project No. 212511-04
Drawing code:
Reviewed by: MR
Submitted by: SUBMITTER'S NAME MOFFATT & NICHOL
Drawing Scale:
Plot scale: 1:1 (D SHEET)

moffatt & nichol
11 N. WATER ST., SUITE 20220
MOBILE, AL 36602
251-378-9000
WWW.MOFFATTNICHOL.COM

250 N. WATER STREET
MOBILE, AL 36602
ALABAMA PORT AUTHORITY
PORT OF MOBILE

ALABAMA LICENSED No. 50467 PROFESSIONAL ENGINEER PETER WILLIAM KOTULAK
SEAL
Peter W. Kotulak
2025.04.04
11:13:05-04'00'

Sheet Reference No.
C-201
INDEX: 9 OF 22

File: Q:\BR\212511-04\20 CADD_Active_Sheets\Set Blakeley Weir Box\212511-04-WB-C-201 ; Plotted: 4/4/2025 11:04 AM by VOELKER, PAUL ; Saved: 4/2/2025 1:42 PM by PVOELKER

DRAWING SCALES SHOWN BASED ON 22"x34" DRAWING

GENERAL NOTES:

1. THE NOTES BELOW ARE NOT INTENDED TO REPLACE THE SPECIFICATIONS. SEE SPECIFICATIONS FOR REQUIREMENTS IN ADDITION TO THE GENERAL NOTES.
2. THE CONTRACTOR SHALL VERIFY ALL DIMENSIONS AND EXISTING CONDITIONS BEFORE STARTING WORK. NOTIFY ENGINEER OF ANY DISCREPANCIES PRIOR TO STARTING WORK.
3. THE CONTRACTOR SHALL REMOVE FROM THE SITE ANY WASTE MATERIAL AND DEBRIS GENERATED DURING THE COURSE OF THE WORK. DISPOSAL OF ALL GENERATED WASTE MATERIAL AND DEBRIS IS THE CONTRACTOR'S RESPONSIBILITY.
4. CONTRACTOR SHALL REMOVE SEDIMENT FROM SPILLWAY STRUCTURE AFTER CONSTRUCTION IS COMPLETE.
5. THE CONTRACTOR SHALL BE RESPONSIBLE FOR MAINTAINING THE STABILITY OF THE STRUCTURE DURING ALL PHASES OF CONSTRUCTION.

DESIGN CRITERIA:

DESIGN CODES:

1. AMERICAN CONCRETE INSTITUTE (ACI), BUILDING CODE REQUIREMENTS FOR STRUCTURAL CONCRETE AND COMMENTARY, ACI 318-19, 2019.
2. AASHTO LRFD 9TH EDITION, 2020.
3. AMERICAN INSTITUTE OF STEEL CONSTRUCTION (AISC), STEEL CONSTRUCTION MANUAL, 16TH EDITION, 2016.
4. AMERICAN SOCIETY OF CIVIL ENGINEERS (ASCE), STANDARD MINIMUM DESIGN LOADS FOR BUILDINGS AND OTHER STRUCTURES, ASCE 7-16, 2016.
5. AMERICAN WELDING SOCIETY (AWS), STRUCTURAL WELDING CODE-STEEL, AWS D1.1, 2020.
6. INTERNATIONAL BUILDING CODE (IBC), 2021.
7. MANHOLE STRUCTURES ARE DESIGNED FOR HS-20 TRUCK LOADING.

VERTICAL DESIGN LOADS:

1. PLATFORM GRATING IS DESIGNED TO ACCOMMODATE 100 POUNDS PER SQUARE FOOT UNIFORMLY DISTRIBUTED LIVE LOAD.
2. STRUCTURE DESIGNED TO ACCOMMODATE FULL OPERATIONAL WEIGHT OF ALL MECHANICAL EQUIPMENT, FITTINGS, AND PIPING AT THE LOCATIONS SHOWN IN THE CONTRACT DOCUMENTS. IF ALTERNATE COMPONENTS AND/OR LOCATIONS ARE PROPOSED, NOTIFY THE STRUCTURAL ENGINEER TO CONFIRM COMPATIBILITY WITH THE DESIGNED STRUCTURE AND SUPPORTS.
3. SPILLWAY STRUCTURE IS DESIGNED TO RESIST UPLIFT DUE TO BUOYANCY WITH A FACTOR OF SAFETY OF 1.3.
4. THE STRUCTURES ARE DESIGNED FOR MAXIMUM HYDRAULIC DREDGE TOP ELEVATION OF +68 FEET FOR BOTH EAST AND WEST SPILLWAY STRUCTURES..
5. WALKWAY SHALL BE DESIGNED FOR A PEDESTRIAN LIVE LOAD OF 100 PSF.
6. THE WEIR BOX FOUNDATION IS TO BE PLACED ON BACKFILLED SAND, WHICH SERVED AS A SURCHARGE FOR THE BASE DIKE SAND FILL.

LATERAL DESIGN LOADS

1. WIND PRESSURE ON EXPOSED PORTIONS OF THE STRUCTURE BASED ON 154 MPH WIND SPEED FOR RISK CATEGORY II IN ACCORDANCE WITH AMERICAN SOCIETY OF CIVIL ENGINEERS (ASCE) MANUAL ASCE-7-16.
2. SPILLWAY STRUCTURE IS DESIGNED FOR LATERAL SOIL LOAD OF DENSITY = 90 PCF WITH A DESIGN DREDGE ELEVATION OF ONE (1) FOOT BELOW THE TOP PLATFORM OF THE STRUCTURE AND ACTIVE SOIL PRESSURE COEFFICIENT Ka=1.0.
3. POST AND GUARD RAIL DESIGNED FOR A LATERAL LOAD OF 50 LB/FT ACTING ON TOP OR MIDRAIL OR ONE SINGLE 200 LB POINT LOAD ON TOP OR MIDRAIL, WHICHEVER CONTROLS.
4. MANHOLE STRUCTURES ARE DESIGNED FOR LATRAL SOIL AND LIVE LOADING AS SPECIFIED IN AASHTO-LRFD SPECIFICATION.

STRUCTURAL AND MISCELLANEOUS STEEL:

1. ALL STEEL WORK SHALL BE PERFORMED IN ACCORDANCE WITH THE AISC SPECIFICATIONS FOR THE DESIGN, FABRICATION AND ERECTION OF STRUCTURAL STEEL FOR BUILDINGS.
2. STRUCTURAL AND MISCELLANEOUS STEEL MATERIALS SHALL CONFORM TO THE FOLLOWING:

SHAPES, BARS AND PLATES:	ASTM A 992 A 325, ASTM A572 GRADE 50
BOLTS AND NUTS, UNLESS OTHERWISE NOTED:	ASTM F 3125, GRADE 325, GALVANIZED
ANCHOR BOLTS:	ASTM F 1554, GRADE 55, GALVANIZED
STEEL PIPES:	ASTM A53/A53M TYPE E OR S, GRADE B

3. WASHERS SHALL BE CIRCULAR FLAT SMOOTH AND SHALL CONFORM TO ANSI B18.22.1, UNLESS OTHERWISE SPECIFIED.
4. ALL WELDING SHALL CONFORM TO AWS D.1.1., 2015, UNLESS OTHERWISE SPECIFIED.
5. ALL BOLTS AND HARDWARE, EXCEPT STAINLESS STEEL, SHALL BE ZINC COATED OR GALVANIZED BY THE HOT DIPPED PROCESS IN ACCORDANCE WITH THE REQUIREMENTS OF ASTM A153, AFTER FABRICATION, UNLESS OTHERWISE NOTED.
6. COAT ALL STRUCTURAL STEEL SHAPES, PLATES, FABRICATIONS ACCORDING TO THE SPECIFICATIONS.
7. MINIMUM BOLT SIZE SHALL BE AS SHOWN IN DRAWINGS.
8. ALL BOLTED CONNECTIONS SHALL HAVE HEAVY HEX NUTS AND WASHERS UNLESS OTHERWISE NOTED.
9. THE CONTRACTOR SHALL COORDINATE AND PROVIDE ACCOMMODATION FOR ALL FABRICATED, EMBEDDED AND ATTACHED DEVICES AND STRUCTURES.
10. GRATING SHALL BE TYPE W-19-4 (2 1/4x3/16) STEEL SERRATED METAL GRATIING GALVANIZED CONFORMING TO NAAMM STANDARD.
11. SEE SPECIFICATIONS FOR ADDITIONAL REQUIREMENTS.

TIMBER:

1. SEE SPECIFICATIONS FOR WEIR BOARD REQUIREMENTS.

CONCRETE AND REINFORCING STEEL:

1. ALL CONCRETE WORK SHALL BE PERFORMED IN ACCORDANCE WITH THE LATEST ADOPTED EDITION OF THE FOLLOWING ACI CODES: ACI 318, ACI 315R, ACI 304R, AND ACI 301, UNLESS OTHERWISE NOTED.
2. ALL CONCRETE SHALL BE NORMAL WEIGHT.
3. ALL DETAILING, FABRICATION AND ERECTION OF REINFORCING STEEL SHALL CONFORM TO THE ACI MANUAL OF STANDARD PRACTICE FOR DETAILING REINFORCED CONCRETE STRUCTURES, ACI SP-66, LATEST EDITION.
4. MATERIALS SHALL CONFORM TO THE FOLLOWING, UNLESS OTHERWISE NOTED:

   A. CONCRETE:

      a. CAST-IN-PLACE CONCRETE: 28 DAY STRENGTH = 5,000 PSI

   B. REINFORCING STEEL:

      a. REINFORCING STEEL AND DOWELS FOR CONCRETE: ASTM A 615, GRADE 60 UNLESS OTHERWISE NOTED.
      b. REINFORCING TO BE WELDED: ASTM A706
      c. WELDED WIRE FABRIC: ASTM A 185.

   C. CEMENTITIOUS GROUT SHALL BE NON-METALLIC AND NON-SHRINK WITH A MINIMUM COMPRESSIVE STRENGTH OF 8000 PSI AT 28 DAYS, UNLESS OTHERWISE NOTED.

5. CHAMFER ALL EXPOSED EXTERNAL CORNERS OF CONCRETE WITH A 3/4" - 45 DEGREE CHAMFER UNLESS OTHERWISE NOTED.
6. MINIMUM COVER FOR REINFORCEMENT SHALL BE 3 INCHES UNLESS OTHERWISE NOTED.
7. CONSTRUCTION LOADS GREATER THAN 50% OF THE DESIGN LOAD FOR ANY NEW PORTION OF THE STRUCTURE SHALL NOT BE IMPOSED UNTIL THE CONCRETE CYLINDER STRENGTH FOR THOSE MEMBERS HAVE REACHED 80% OF THE 28 DAY CONCRETE STRENGTH.
8. ALL REINFORCING BAR SPLICES SHALL BE CLASS B TENSION LAP SPLICES IN ACCORDANCE WITH ACI 318 UNLESS OTHERWISE NOTED.
9. REINFORCING BAR SPLICES (fc'=5000 PSI) IN INCHES, AS SHOWN BELOW:

LAP SPLICES OF REINFORCING BARS F'c=5,000 PSI

BAR SIZE	LAP CLASS	TOP BARS	BOTTOM BARS
#3	B	22"	17"
#4	B	29"	23"
#5	B	36"	28"
#6	B	43"	34"
#7	B	63"	49"
#8	B	72"	56"
#9	B	81"	63"
#10	B	90"	69"

ISSUED FOR BID
ISSUED: 2025-04-04
NOT TO BE USED FOR CONSTRUCTION

ALABAMA PORT AUTHORITY
PORT OF MOBILE

Mark	Description	Date	Appr.

BLAKELEY / MUD LAKES WEIR BOXES PROJECT

STRUCTURAL NOTES AND DESIGN CRITERIA

Rev:
Date: 2025-04-04
M&N Project No. 212511-04
Designed by: PWK
Cad by: PGV
Dwn by: HR
Reviewed by: MR
Submitted by: SUBMITTER'S NAME MOFFATT & NICHOL
Drawing code:
Drawing Scale:
Plot scale: 1:1 (0 SHEET)

moffatt & nichol
11 N. WATER ST., SUITE 20220
MOBILE, AL 36602
251-378-9000
WWW.MOFFATTNICHOL.COM

250 N. WATER STREET
MOBILE, AL 36602
ALABAMA PORT AUTHORITY
PORT OF MOBILE

ALABAMA LICENSED No. 50467 PROFESSIONAL ENGINEER PETER WILLIAM KOTULAK
SEAL
Peter W. Kotulak
2025.04.04
11:13:05-04'00'

Sheet Reference No.
S-001
INDEX: 10 OF 22

File: Q:\BR\212511-04\20 CADD_Active_SheetSet Blakeley Weir Box\212511-04-WB-S-001 ; Plotted: 4/4/2025 11:04 AM by VOELKER, PAUL ; Saved: 3/6/2023 3:45 PM by TOCOOPER

DRAWING SCALES SHOWN BASED ON 22"x34" DRAWING

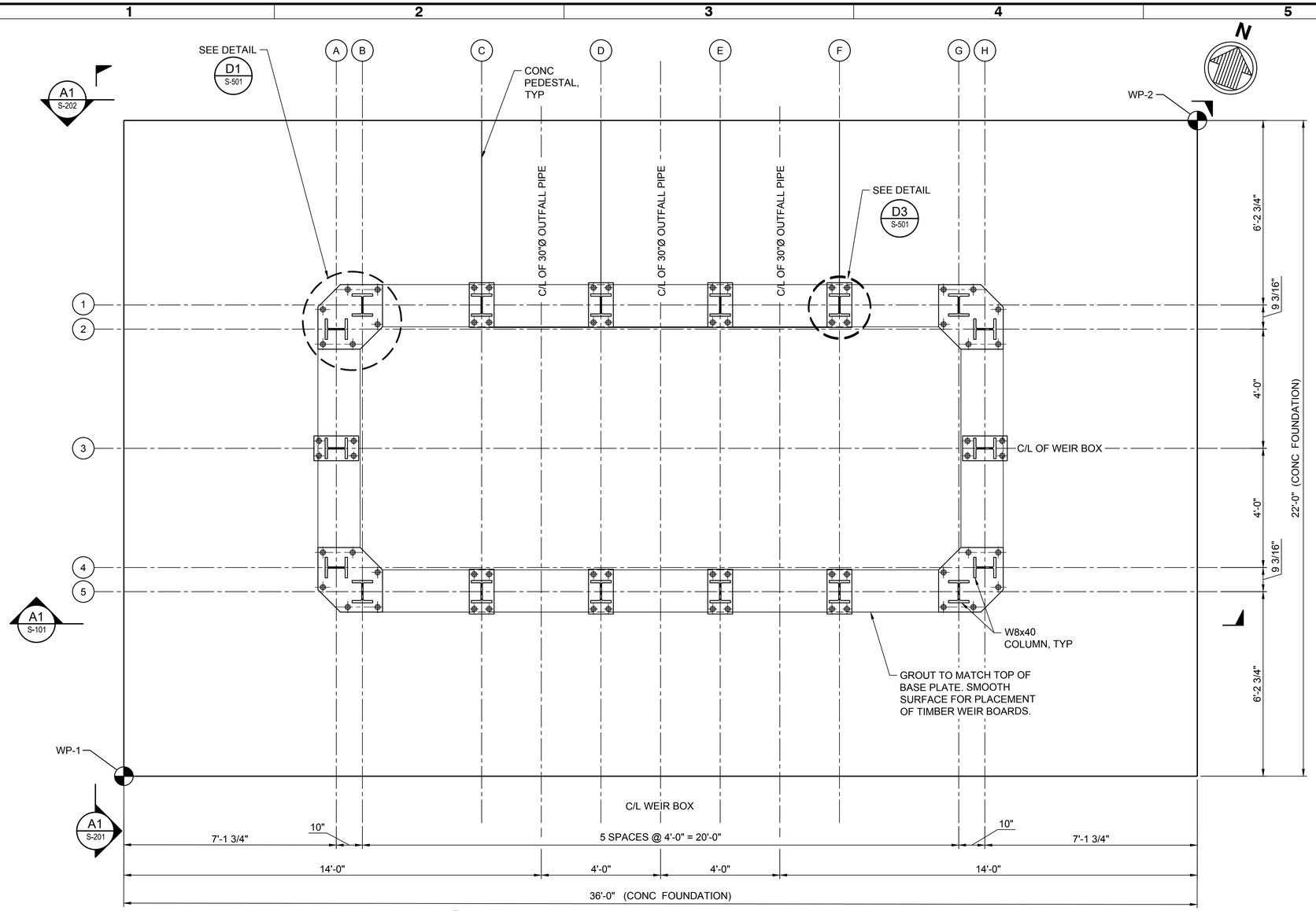

B1 S-101 PLAN - EAST WEIR BOX FOUNDATION AND COLUMN LAYOUT

SCALE: 1/2"=1'-0"

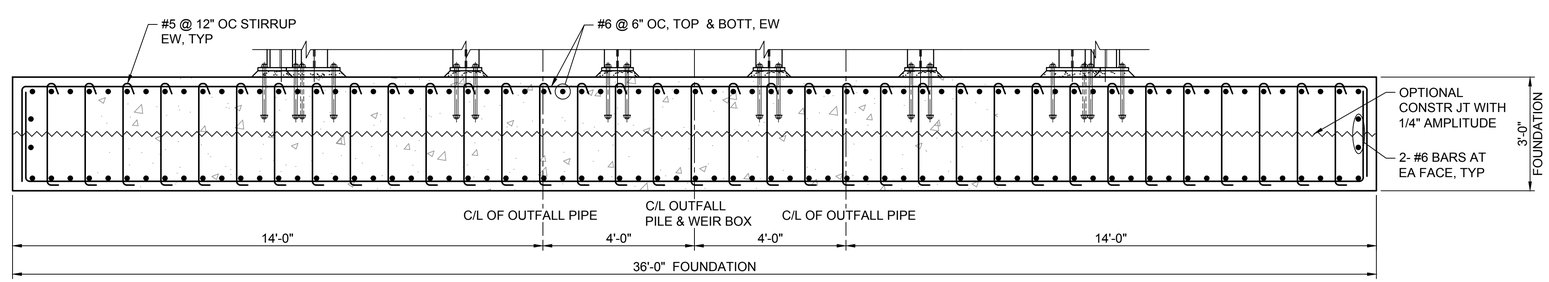

A1 S-101 SECTION - EAST WEIR BOX FOUNDATION REINFORCEMENT

SCALE: 1/2"=1'-0"

NOTES:

1. FOR GENERAL NOTES AND SEQUENCE OF CONSTRUCTION, SEE SHT G-002.
2. FOR WORKING POINTS, SEE THE TABLE PROVIDED WITHIN THIS SHEET.

WORKING POINTS		
POINT #	NORTHING	EASTING
WP-1	263224.22	1802177.22
WP-2	263256.89	1802203.91

2'-0" 0'-0" 2'-0" 4'-0"

SCALE: 1/2"=1'-0"

ISSUED FOR BID
ISSUED: 2025-04-04
NOT TO BE USED FOR CONSTRUCTION

ALABAMA PORT AUTHORITY
PORT OF MOBILE

Mark	Description	Date	Appr.

BLAKELEY / MUD LAKES WEIR BOXES PROJECT

PLAN - EAST WEIR BOX FOUNDATION AND COLUMN LAYOUT

Designed by: PWK
Date: 2025-04-04
Rev.
Dwn by: HR
Ckd by: PGV
M&N Project No. 212511-04
Reviewed by: MR
Drawing code:
Submitted by: SUBMITTER'S NAME MOFFATT & NICHOL
Drawing Scale:
Plot scale: 1:1 (D SHEET)

moffatt & nichol
11 N. WATER ST., SUITE 20220
MOBILE, AL 36602
251-378-9000
WWW.MOFFATTNICHOL.COM

ALABAMA PORT AUTHORITY
250 N. WATER STREET
MOBILE, AL 36602

ALABAMA LICENSED No. 50467 PROFESSIONAL ENGINEER PETER WILLIAM KOTULAK

SEAL Peter W. Kotulak 2025.04.04 11:13:06-04'00'

Sheet Reference No.
S-101
INDEX: 11 OF 22

File: Q:\BR\212511-04\20 CADD_Active_Sheet\Set Blakeley Weir Box\212511-04-WB-S-101 ; Plotted: 4/4/2025 11:04 AM by VOELKER, PAUL ; Saved: 3/25/2025 7:13 PM by WMORENO

DRAWING SCALES SHOWN BASED ON 22"x34" DRAWING

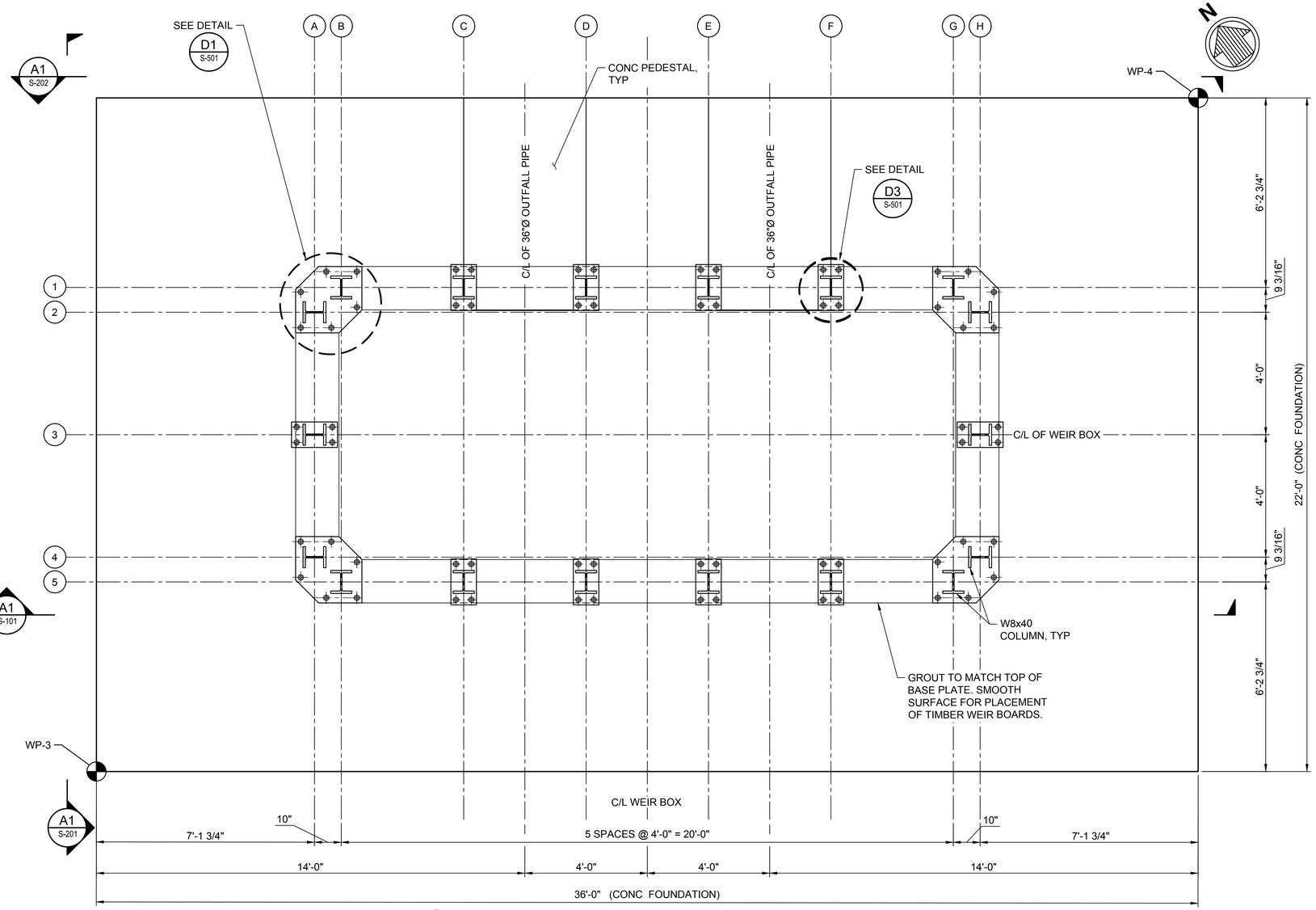

B1 S-102 PLAN - WEST WEIR BOX FOUNDATION AND COLUMN LAYOUT

SCALE: 1/2"=1'-0"

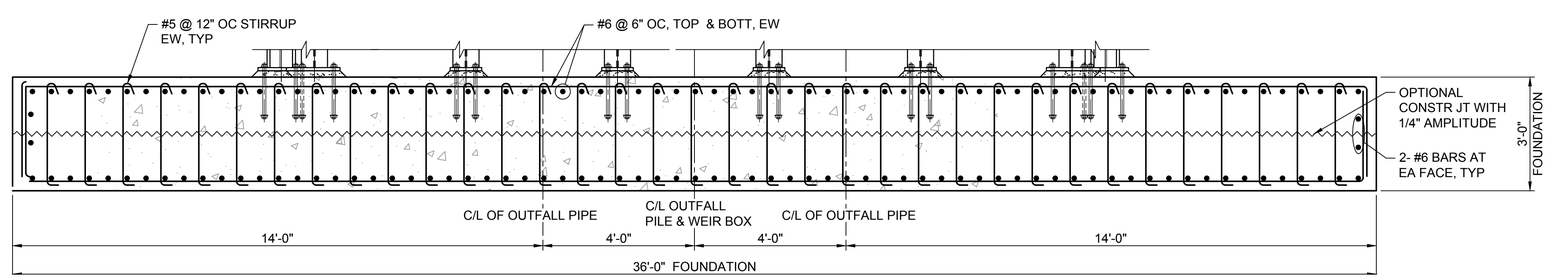

A1 S-102 SECTION - WEST WEIR BOX FOUNDATION REINFORCEMENT

SCALE: 1/2"=1'-0"

NOTES:

1. FOR GENERAL NOTES AND SEQUENCE OF CONSTRUCTION, SEE SHT G-002.
2. FOR WORKING POINTS,SEE THE TABLE PROVIDED WITHIN THIS SHEET.

WORKING POINTS		
POINT #	NORTHING	EASTING
WP-3	263291.17	1801771.81
WP-4	263286.92	1801813.78

2'-0" 0'-0" 2'-0" 4'-0"

SCALE: 1/2"=1'-0"

ISSUED FOR BID
ISSUED: 2025-04-04
NOT TO BE USED FOR CONSTRUCTION

ALABAMA PORT AUTHORITY
PORT OF MOBILE

Mark	Description	Date	Appr.

BLAKELEY / MUD LAKES
WEIR BOXES PROJECT

PLAN - WEST WEIR BOX FOUNDATION AND COLUMN LAYOUT

Rev.

Date: 2025-04-04

M&N Project No. 212511-04

Drawing code:

Drawing Scale:

Plot scale: 1:1 (D SHEET)

Designed by: PWK

Dwn by: HR

Cad by: PGV

Reviewed by: MR

Submitted by: SUBMITTER'S NAME MOFFATT & NICHOL

moffatt & nichol
11 N. WATER ST., SUITE 20220
MOBILE, AL 36602
251-378-9000
WWW.MOFFATTNICHOL.COM

250 N. WATER STREET
MOBILE, AL 36602
ALABAMA PORT AUTHORITY
PORT OF MOBILE

ALABAMA LICENSED No. 50467 PROFESSIONAL ENGINEER PETER WILLIAM KOTULAK

SEAL

Peter W. Kotulak
2025.04.04
11:13:06-04'00'

Sheet
Reference No.
S-102

INDEX: 12 OF 22

File: Q:\BR\212511-04\20 CADD_Active_Sheet\Set Blakeley Weir Box\212511-04-WB-S-102 ; Plotted: 4/4/2025 11:04 AM by VOELKER, PAUL ; Saved: 3/25/2025 7:05 PM by WMORENO

DRAWING SCALES SHOWN BASED ON 22"x34" DRAWING

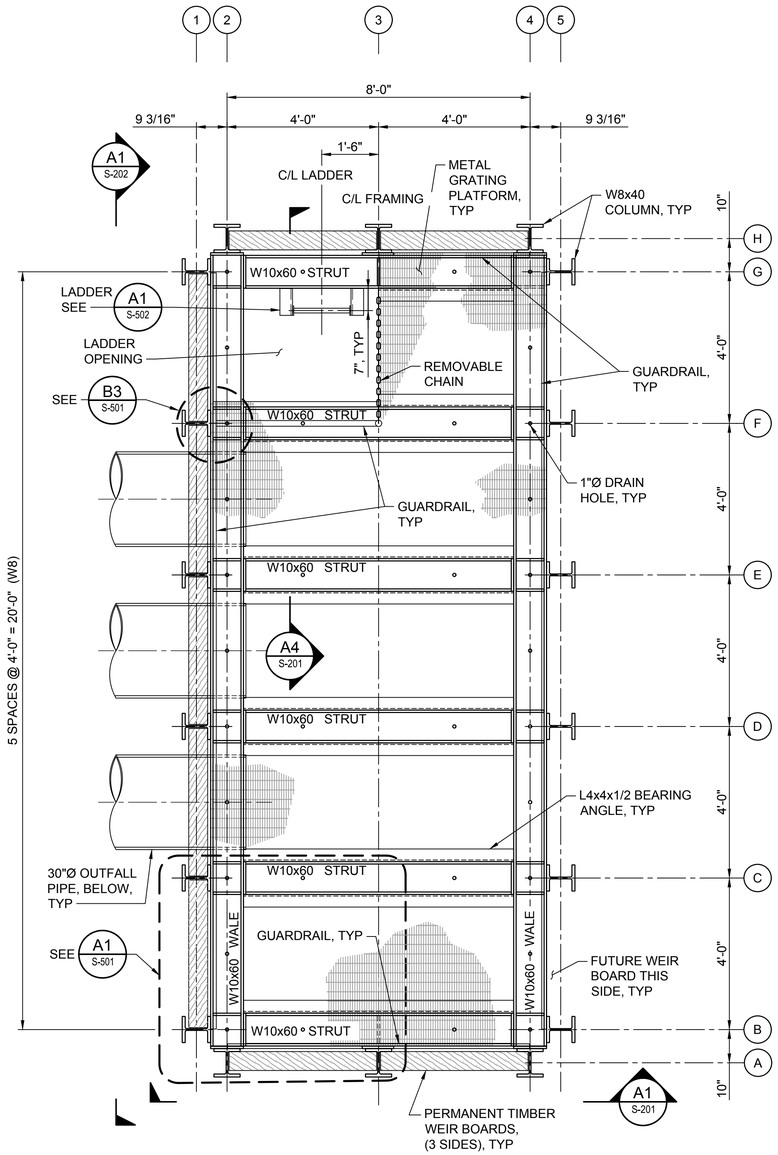

B1 S-103 PLAN - EAST WEIR BOX FRAMING - INTERMEDIATE LEVELS
SCALE: 1/2"=1'-0"

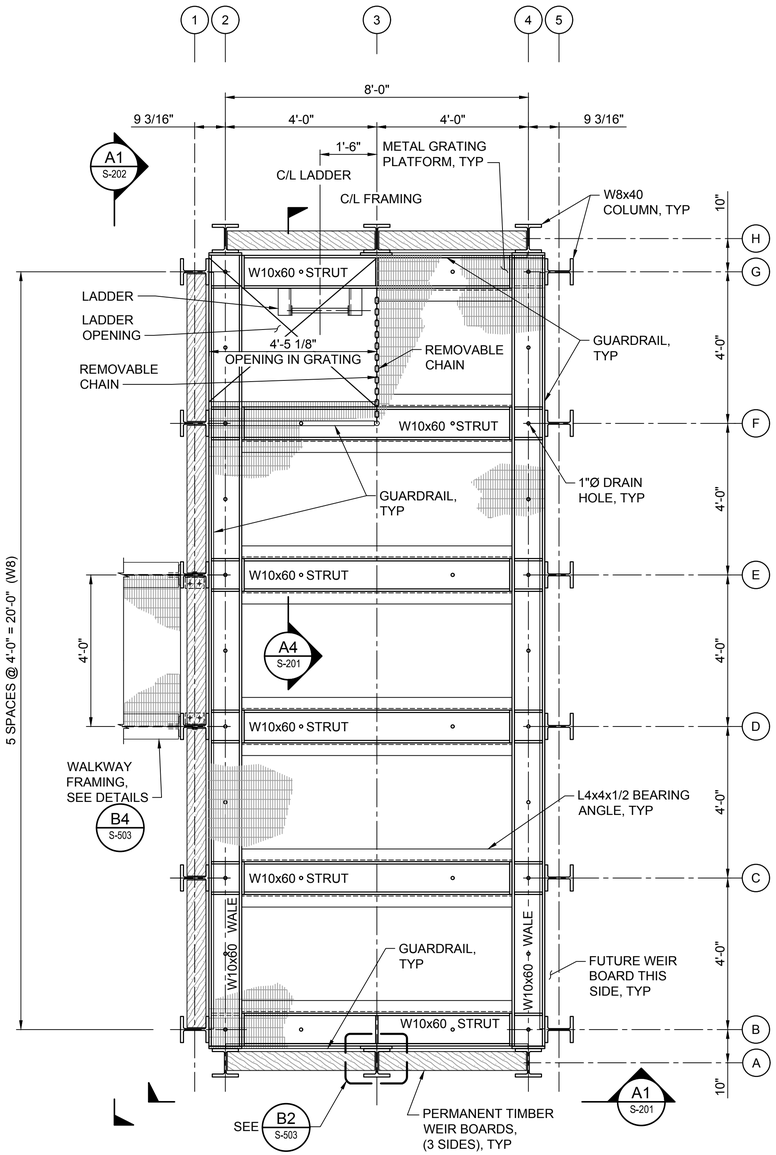

B3 S-103 PLAN - EAST WEIR BOX FRAMING - TOP DECK
SCALE: 1/2"=1'-0"

2'-0" 0'-0" 2'-0" 4'-0"
SCALE: 1/2"=1'-0"

ISSUED FOR BID
ISSUED: 2025-04-04
NOT TO BE USED FOR CONSTRUCTION

DRAWING SCALES SHOWN BASED ON 22"x34" DRAWING

ALABAMA PORT AUTHORITY
PORT OF MOBILE

Mark	Description	Date	Appr.

BLAKELEY / MUD LAKES WEIR BOXES PROJECT

PLAN - EAST WEIR BOX FRAMING AND DECK

moffatt & nichol
11 N. WATER ST., SUITE 20220
MOBILE, AL 36602
251-378-9000
WWW.MOFFATTNICHOL.COM

250 N. WATER STREET
MOBILE, AL 36602
ALABAMA PORT AUTHORITY
PORT OF MOBILE

Designed by: PWK
Dwn by: HR
Ckd by: PGV
Reviewed by: MR
Submitted by: SUBMITTER'S NAME MOFFATT & NICHOL
Date: 2025-04-04
Rev.
M&N Project No. 212511-04
Drawing code:
Drawing Scale:
Plot scale: 1:1 (D SHEET)

ALABAMA LICENSED No. 50467 PROFESSIONAL ENGINEER PETER WILLIAM KOTULAK
SEAL
Peter W. Kotulak
2025.04.04
11:13:07-04'00'

Sheet Reference No.
S-103
INDEX: 13 OF 22

File: Q:\BR\212511-04\20 CADD_Active_Sheet\Set Blakeley Weir Box\212511-04-WB-S-103 ; Plotted: 4/4/2025 11:05 AM by VOELKER, PAUL ; Saved: 3/31/2025 11:46 AM by PVOELKER

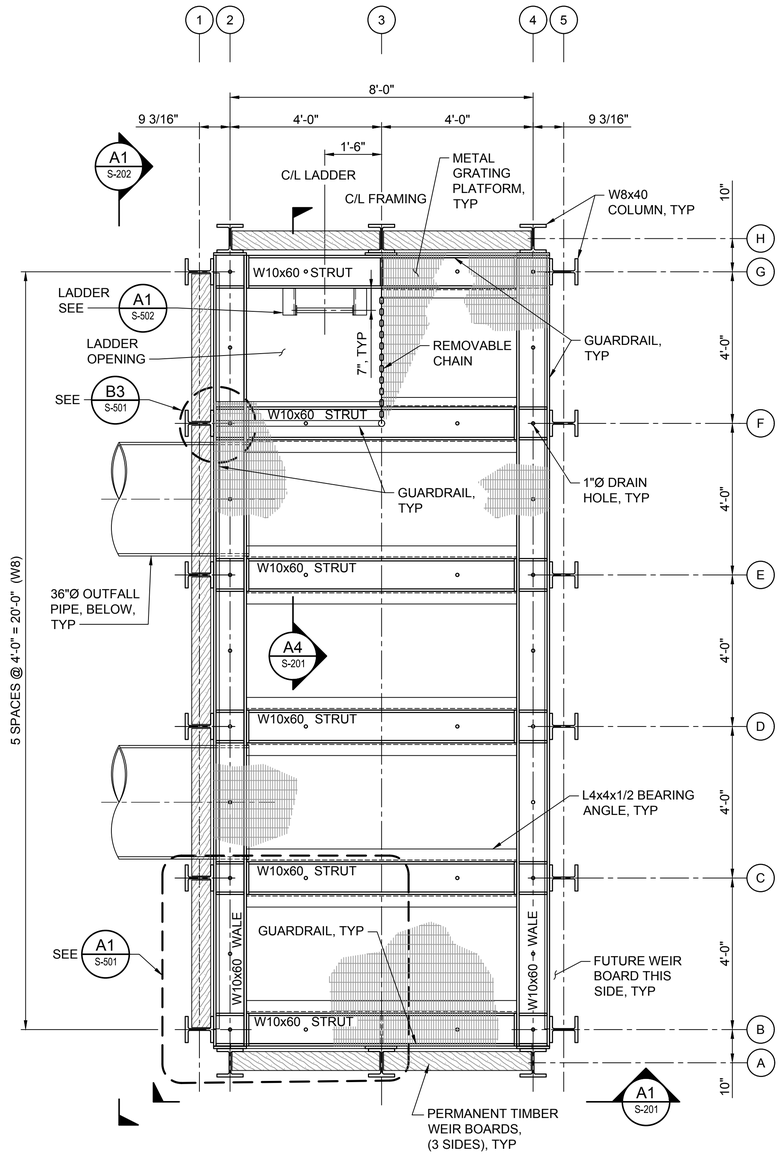

B1 S-104 PLAN - WEST WEIR BOX FRAMING - INTERMEDIATE LEVEL
SCALE: 1/2"=1'-0"

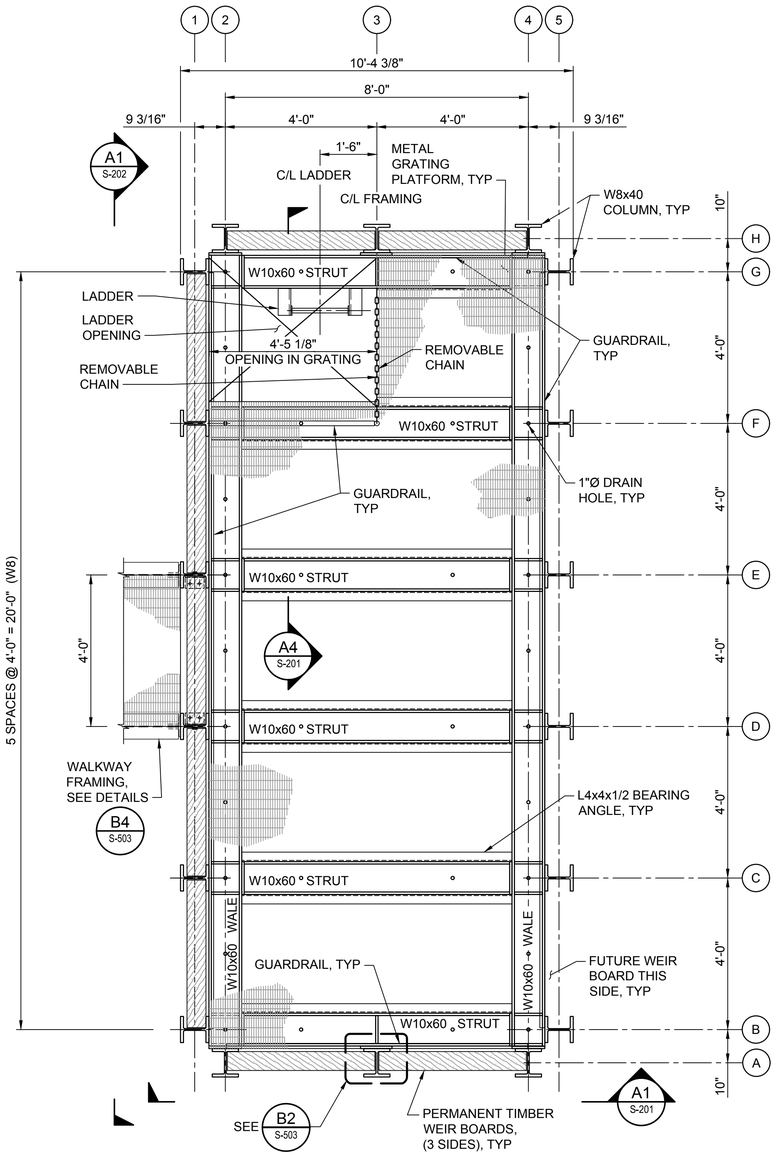

B3 S-104 PLAN - WEST WEIR BOX FRAMING - TOP DECK
SCALE: 1/2"=1'-0"

2'-0" 0'-0" 2'-0" 4'-0"
SCALE: 1/2"=1'-0"

ISSUED FOR BID
ISSUED: 2025-04-04
NOT TO BE USED FOR CONSTRUCTION

ALABAMA PORT AUTHORITY
PORT OF MOBILE

Mark	Description	Date	Appr

BLAKELEY / MUD LAKES WEIR BOXES PROJECT

PLAN - WEST WEIR BOX FRAMING AND DECK

Designed by: PWK
Dwn by: HR
Ckd by: PGV
Reviewed by: MR
Submitted by: SUBMITTER'S NAME MOFFATT & NICHOL
Date: 2025-04-04
Rev.
M&N Project No. 212511-04
Drawing code:
Drawing Scale:
Plot scale: 1:1 (D SHEET)

moffatt & nichol
11 N. WATER ST., SUITE 20220
MOBILE, AL 36602
251-378-9000
WWW.MOFFATTNICHOL.COM

250 N. WATER STREET
MOBILE, AL 36602
ALABAMA PORT AUTHORITY PORT OF MOBILE

ALABAMA LICENSED No. 50467 PROFESSIONAL ENGINEER PETER WILLIAM KOTULAK
SEAL
Peter W. Kotulak
2025.04.04
11:13:07-04'00'

Sheet Reference No.
S-104
INDEX: 14 OF 22

File: Q:\BR\212511-04\20 CADD_Active_Sheet\Set Blakeley Weir Box\212511-04-WB-S-104 , Plotted: 4/4/2025 11:05 AM by: VOELKER, PAUL , Saved: 3/31/2025 1:13 PM by: PVOELKER

DRAWING SCALES SHOWN BASED ON 22"x34" DRAWING

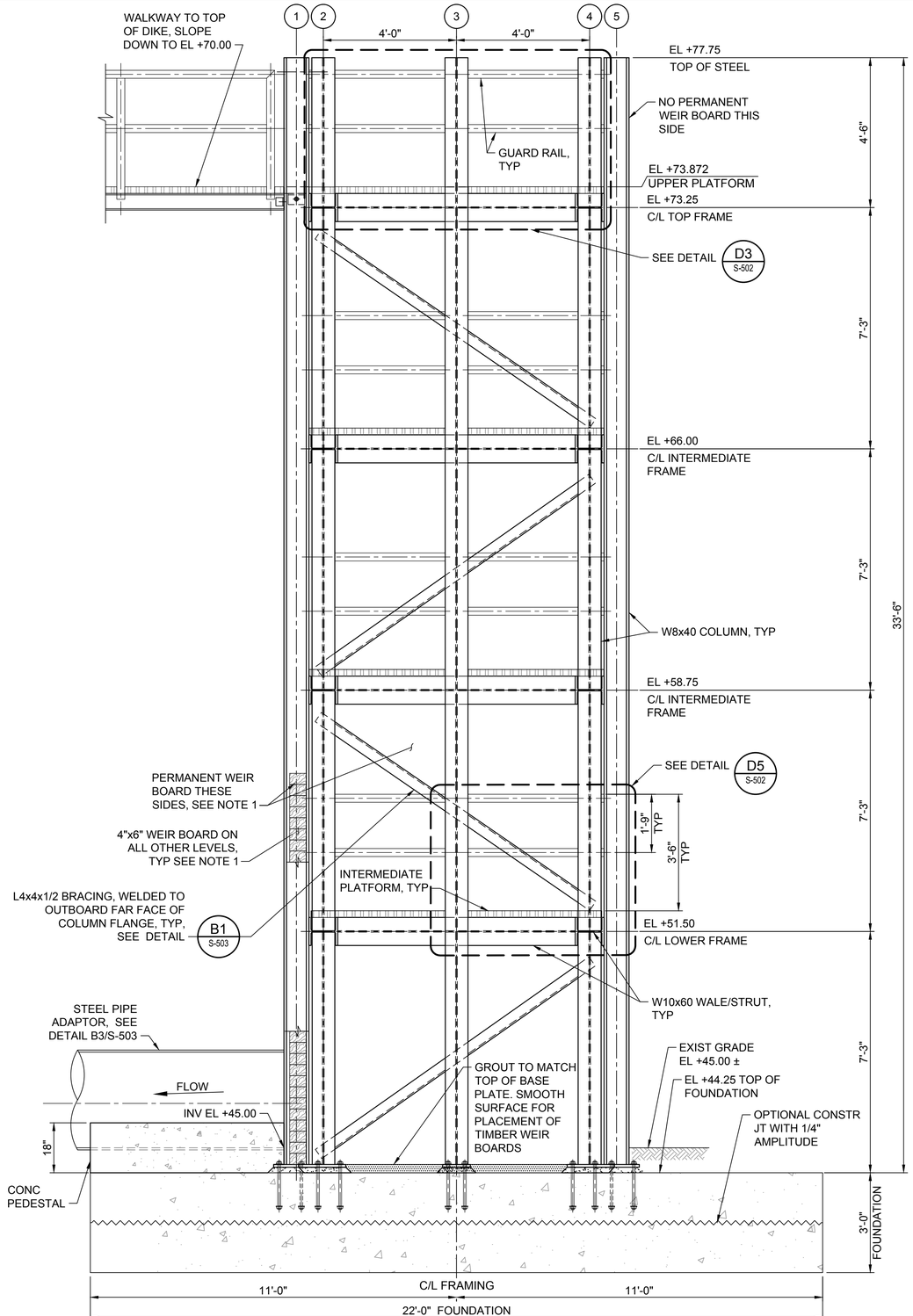

A1 S-201 ELEVATION - TYPICAL WEIR BOX FRAMING

SCALE: 6" = 1'-0"

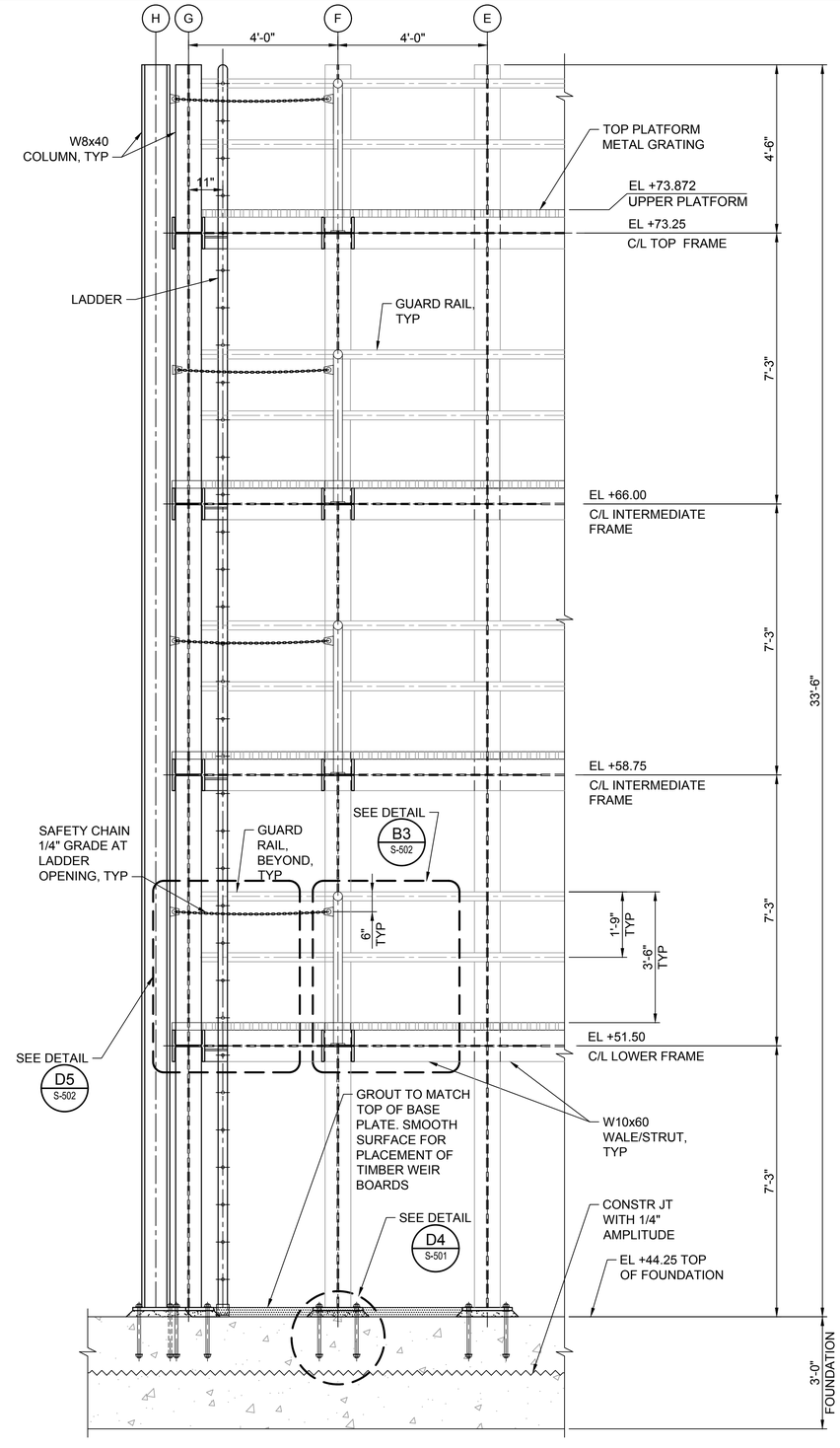

A4 S-201 SECTION - TYPICAL WEIR BOX FRAMING

SCALE: 6" = 1'-0"

NOTES:

1. PROVIDE PERMANENT WEIRBOARDS INSTALLED THREE SIDES ONLY (DIKE SIDE AND TWO SHORT SIDES) INSTALL TO EL+51.50. PROVIDE WEIRBOARDS FOR THE FRONT SIDE BUT DO NOT INSTALL.

2'-0" 0'-0" 2'-0" 4'-0"

SCALE: 1/2"=1'-0"

ISSUED FOR BID
ISSUED: 2025-04-04
NOT TO BE USED FOR CONSTRUCTION

ALABAMA PORT AUTHORITY
PORT OF MOBILE

Mark	Description	Date	Appr

BLAKELEY / MUD LAKES WEIR BOXES PROJECT

ELEVATIONS - TYPICAL WEIR BOX FRAMING

Designed by: PWK
Dwn by: HR
Ckd by: PGV
Reviewed by: MR
Submitted by: SUBMITTER'S NAME MOFFATT & NICHOL
Date: 2025-04-04
M&N Project No. 212511-04
Drawing code:
Drawing Scale:
Plot scale: 1:1 (D SHEET)
Rev.

moffatt & nichol
11 N. WATER ST., SUITE 20220
MOBILE, AL 36602
251-378-9000
WWW.MOFFATTNICHOL.COM

ALABAMA PORT AUTHORITY
250 N. WATER STREET
MOBILE, AL 36602

ALABAMA LICENSED No. 50467 PROFESSIONAL ENGINEER WILLIAM KOTULAK
Peter W. Kotulak
2025.04.04
SEAL 11:13:08-04'00'

Sheet Reference No.
S-201
INDEX: 15 OF 22

File: Q:\BR\212511-04\20 CADD_Active_Sheets\Blakeley Weir Box\212511-04-WB-S-201 - Plotted: 4/4/2025 11:05 AM by: VOELKER, PAUL ; Saved: 3/31/2025 1:51 PM by PVOELKER

DRAWING SCALES SHOWN BASED ON 22"x34" DRAWING

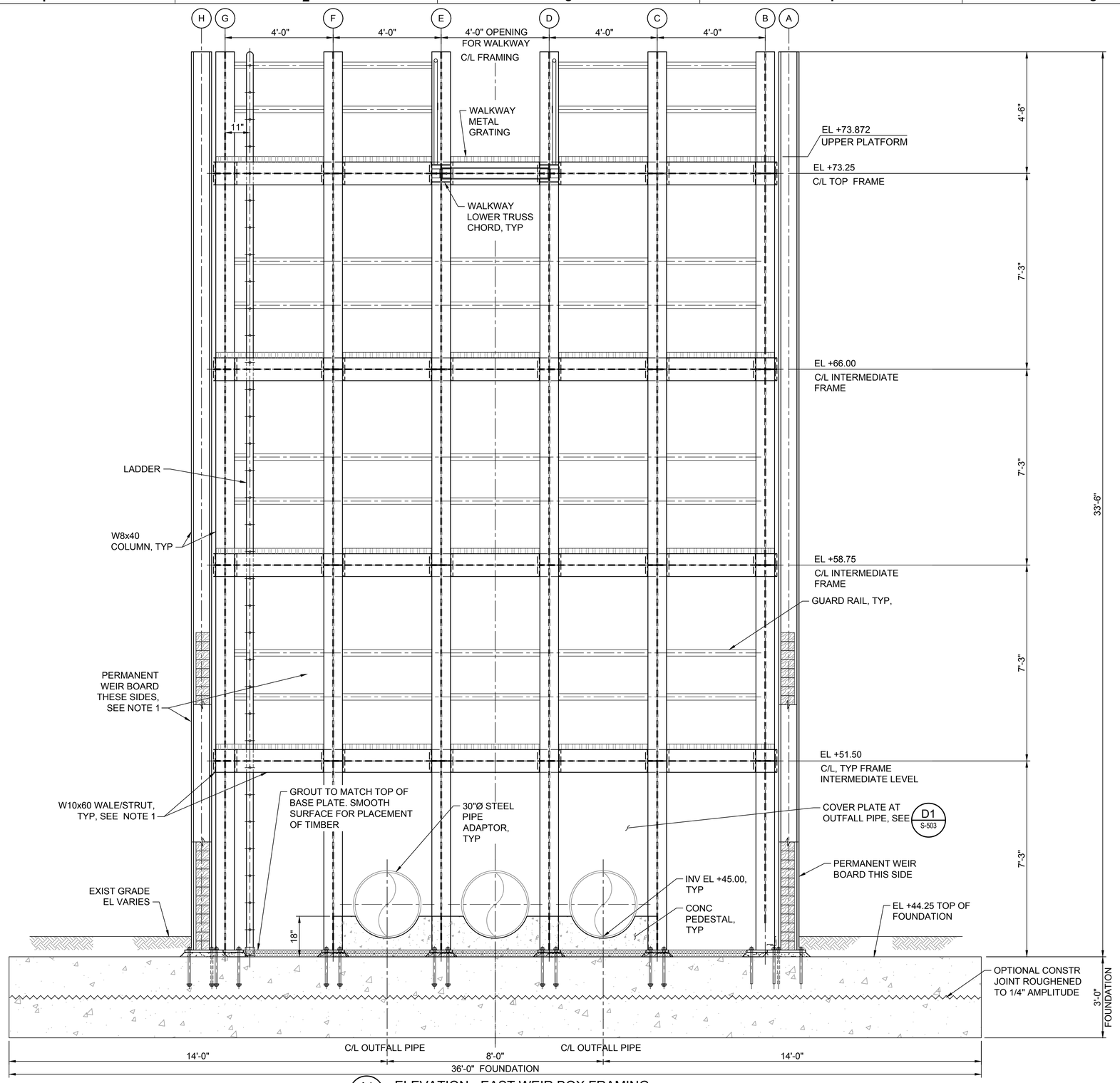

A1 S-103 ELEVATION - EAST WEIR BOX FRAMING

SCALE: 6" = 1'-0"

NOTES:

1. PROVIDE PERMANENT WEIRBOARDS INSTALLED THREE SIDES ONLY (DIKE SIDE AND TWO SHORT SIDES) INSTALL TO EL+51.50. PROVIDE WEIRBOARDS FOR THE FRONT SIDE BUT DO NOT INSTALL.

2'-0" 0'-0" 2'-0" 4'-0"

SCALE: 1/2"=1'-0"

ISSUED FOR BID
ISSUED: 2025-04-04
NOT TO BE USED FOR CONSTRUCTION

ALABAMA PORT AUTHORITY
PORT OF MOBILE

Mark	Description	Date	Appr

BLAKELEY / MUD LAKES WEIR BOXES PROJECT

ELEVATION - EAST WEIR BOX FRAMING

moffatt & nichol
11 N. WATER ST., SUITE 20220
MOBILE, AL 36602
251-378-9000
WWW.MOFFATTNICHOL.COM

250 N. WATER STREET
MOBILE, AL 36602

ALABAMA PORT AUTHORITY
PORT OF MOBILE

Designed by: PWK
Dwn by: HR
Ckd by: PGV
Reviewed by: MR
Submitted by: SUBMITTERS NAME MOFFATT & NICHOL
Date: 2025-04-04
M&N Project No. 212511-04
Drawing code:
Drawing Scale:
Plot scale: 1:1 (D SHEET)
Rev.

ALABAMA LICENSED No. 50467 PROFESSIONAL ENGINEER PETER WILLIAM KOTULAK
Peter W Kotulak
2025.04.04
SEAL 11:13:09-04'00'

Sheet Reference No.
S-202
INDEX: 16 OF 22

File: Q:\BR\212511-04\20 CADD_Active_SheetSet Blakeley Weir Box\212511-04-WB-S-202 , Plotted: 4/4/2025 11:05 AM by PVOELKER, PAUL , Saved: 3/31/2025 1:57 PM by PVOELKER

DRAWING SCALES SHOWN BASED ON 22"x34" DRAWING

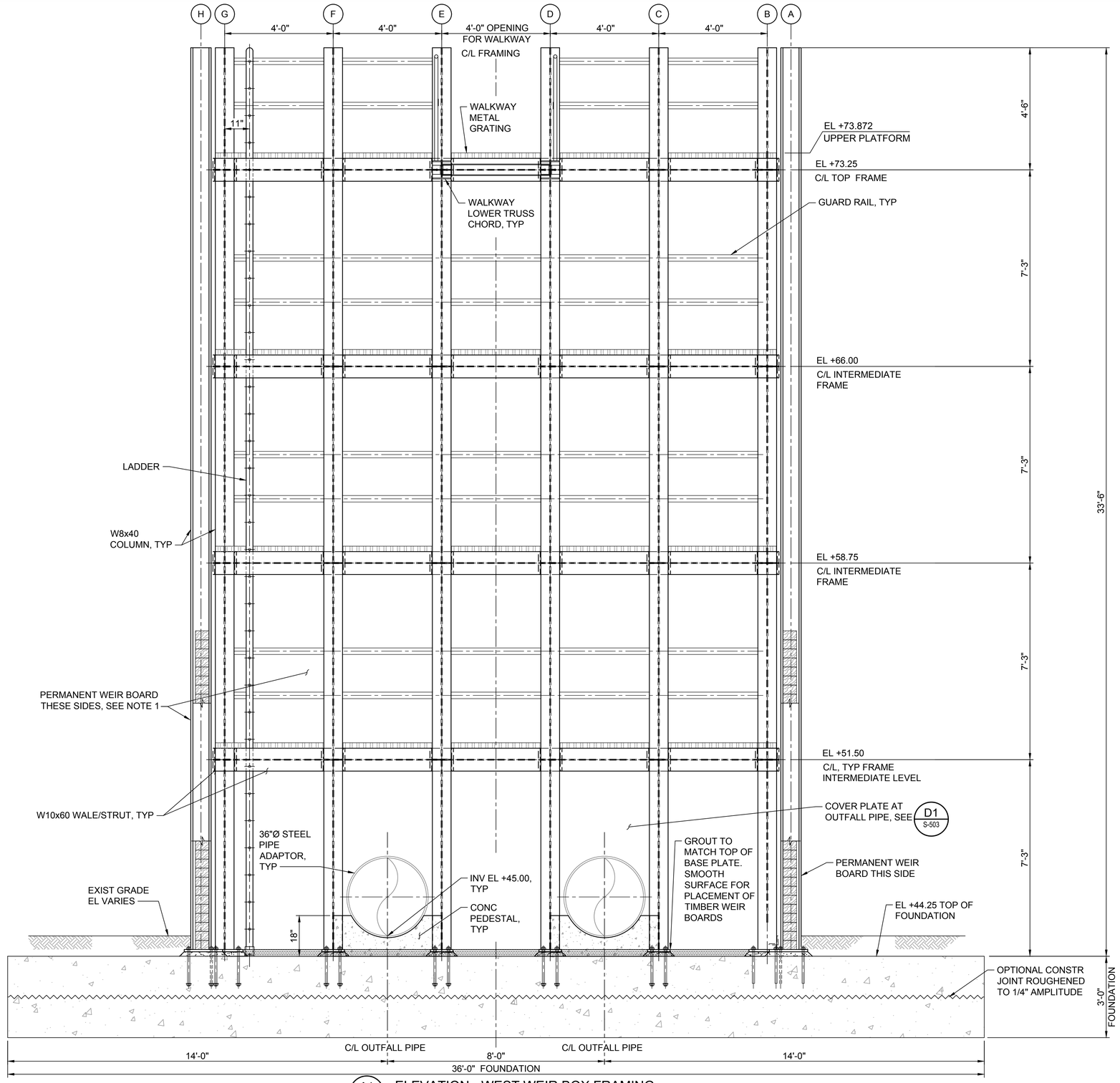

A1 S-104 ELEVATION - WEST WEIR BOX FRAMING

SCALE: 6" = 1'-0"

NOTES:

1. PROVIDE PERMANENT WEIRBOARDS INSTALLED THREE SIDES ONLY (DIKE SIDE AND TWO SHORT SIDES) INSTALL TO EL+51.50. PROVIDE WEIRBOARDS FOR THE FRONT SIDE BUT DO NOT INSTALL.

2'-0" 0'-0" 2'-0" 4'-0"

SCALE: 1/2"=1'-0"

ISSUED FOR BID
ISSUED: 2025-04-04
NOT TO BE USED FOR CONSTRUCTION

ALABAMA PORT AUTHORITY
PORT OF MOBILE

Mark	Description	Date	Appr

BLAKELEY / MUD LAKES WEIR BOXES PROJECT

ELEVATION - WEST WEIR BOX FRAMING

moffatt & nichol
11 N. WATER ST., SUITE 20220
MOBILE, AL 36602
251-378-6000
WWW.MOFFATTNICHOL.COM

250 N. WATER STREET
MOBILE, AL 36602
ALABAMA PORT AUTHORITY PORT OF MOBILE

Designed by: PWK
Dwn by: HR
Ckd by: PGV
Reviewed by: MR
Submitted by: SUBMITTERS NAME MOFFATT & NICHOL
Date: 2025-04-04
M&N Project No. 212511-04
Drawing code:
Drawing Scale:
Plot scale: 1:1 (0 SHEET)
Rev.

ALABAMA LICENSED No. 50467 PROFESSIONAL ENGINEER PETER WILLIAM KOTULAK
Peter W. Kotulak
2025.04.04
SEAL 11:13:09-04'00'

Sheet Reference No.
S-203
INDEX: 17 OF 22

File: Q:\BR\212511-04\20 CADD_Active_SheetSet Blakeley Weir Box\212511-04-WB-S-203 ; Plotted: 4/4/2025 11:05 AM by VOELKER, PAUL ; Saved: 3/31/2025 1:55 PM by PVOELKER

DRAWING SCALES SHOWN BASED ON 22"x34" DRAWING

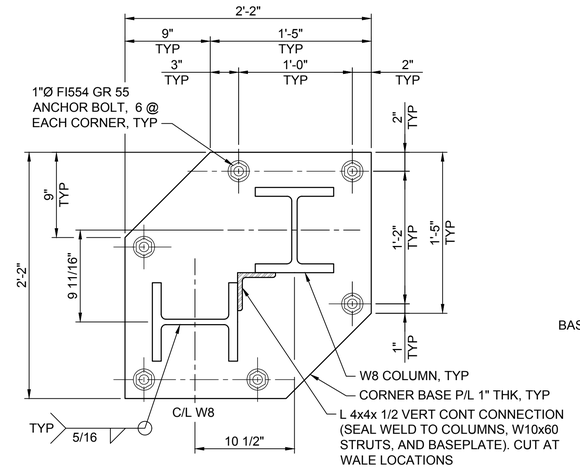

D1 S-501 PLAN - TYPICAL CORNER BASE PLATE
SCALE: 1 1/2" = 1'-0"_1

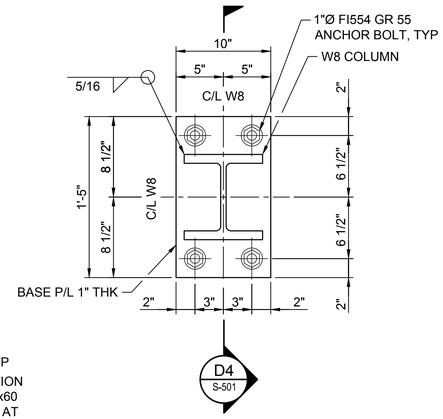

D3 S-501 PLAN - TYPICAL BASE PLATE
SCALE: 1 1/2" = 1'-0"_1

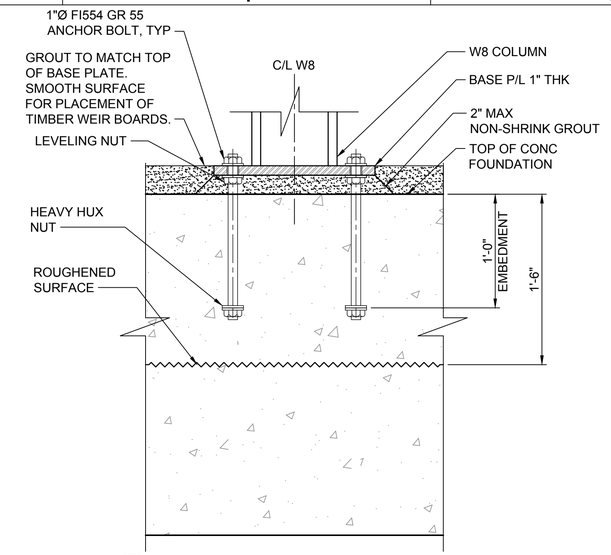

D4 S-501 SECTION - TYPICAL BASE PLATE
SCALE: 1 1/2" = 1'-0"_1

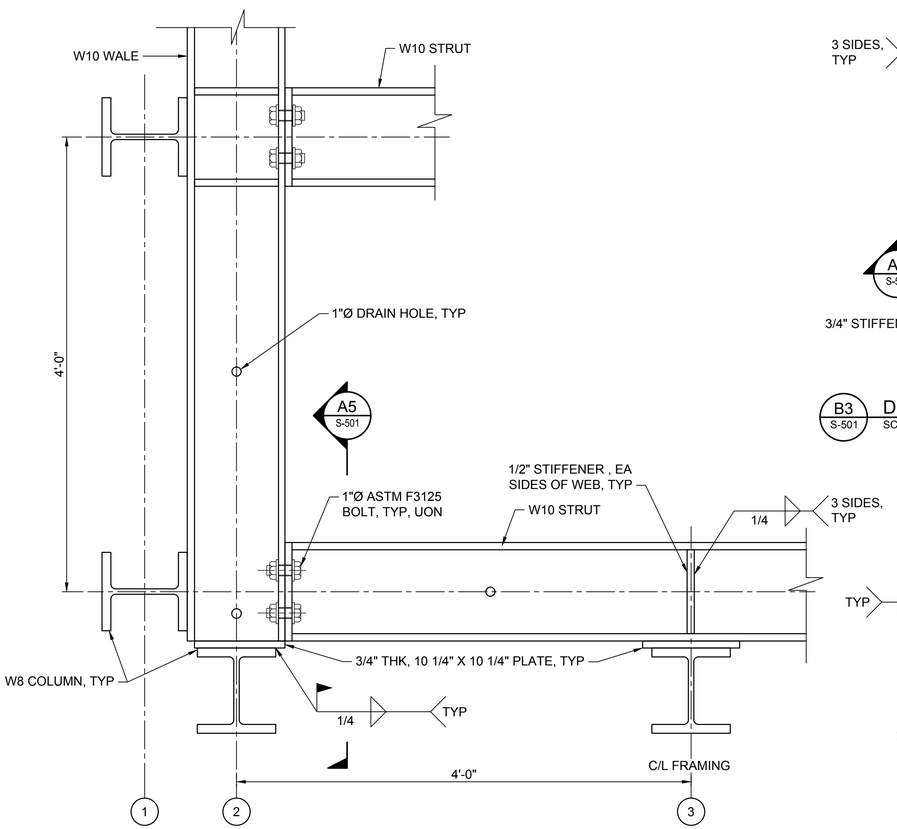

A1 S-501 PARTIAL PLAN - TYPICAL CORNER CONNECTION
SCALE: 1 1/2" = 1'-0"_1

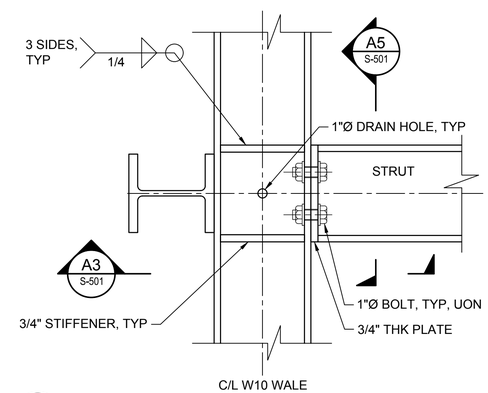

B3 S-501 DETAIL - INTERMEDIATE STRUT/WALE CONNECTION
SCALE: 1 1/2" = 1'-0"_1

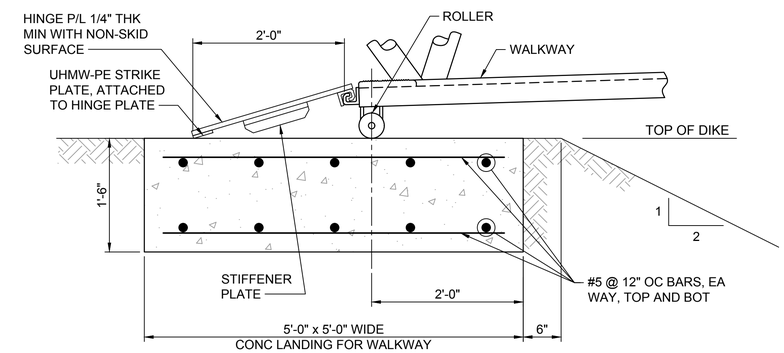

B5 S-501 DETAIL - WALKWAY LANDING AT DIKE
SCALE: 1" = 1'

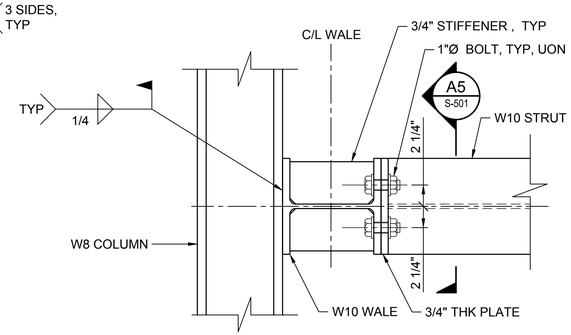

A3 S-501 DETAIL - COLUMN TO STRUT/WALE CONNECTION
SCALE: 1 1/2" = 1'-0"_1

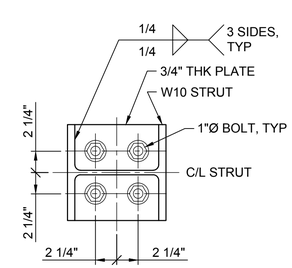

A5 S-501 DETAIL - 3/4' PLATE TO WALE CONNECTION
SCALE: 1 1/2" = 1'-0"_1

1'-0" 0'-0" 1'-0" 2'-0"
SCALE: 1"=1'-0"

1'-0" 0'-0" 6" 1'-0"
SCALE: 1 1/2"=1'-0"

ISSUED FOR BID
ISSUED: 2025-04-04
NOT TO BE USED FOR CONSTRUCTION

DRAWING SCALES SHOWN BASED ON 22"x34" DRAWING

ALABAMA PORT AUTHORITY
PORT OF MOBILE

Mark	Description	Date	Appr.

BLAKELEY / MUD LAKES WEIR BOXES PROJECT

DETAILS - WEIR BOX FRAMING

Designed by: PWK
Dwn by: HR
Ckd by: PGV
Reviewed by: MR
Submitted by: SUBMITTER'S NAME MOFFATT & NICHOL
Date: 2025-04-04
Rev.
M&N Project No. 212511-04
Drawing code:
Drawing Scale:
Plot scale: 1:1 (D SHEET)

moffatt & nichol
11 N. WATER ST., SUITE 20220
MOBILE, AL 36602
251-378-9000
WWW.MOFFATTNICHOL.COM

ALABAMA PORT AUTHORITY
250 N. WATER STREET
MOBILE, AL 36602

ALABAMA LICENSED No. 50467 PROFESSIONAL ENGINEER PETER WILLIAM KOTULAK
Peter W. Kotulak
2025.04.04
SEAL 11:13:10-04'00'

Sheet Reference No.
S-501
INDEX: 18 OF 22

File: Q:\BR\212511-04\20 CADD_Active_Sheet\Set Blakeley Weir Box\212511-04-WB-S-501 ; Plotted: 4/4/2025 11:06 AM by VOELKER, PAUL ; Saved: 3/27/2025 6:20 PM by WMORENO

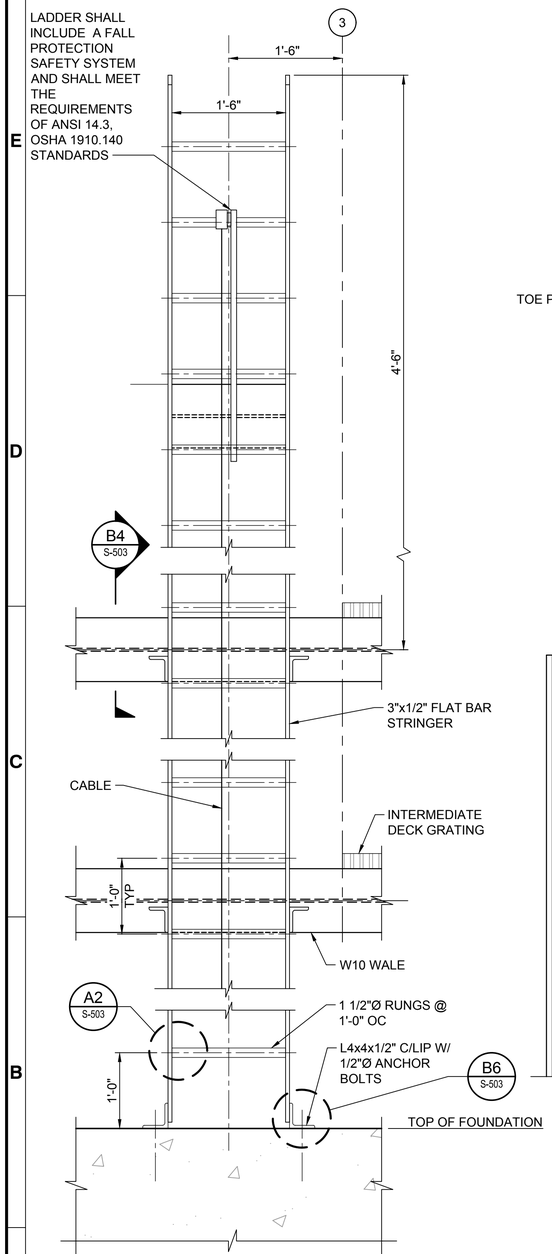

A1 S-502 ELEVATION - LADDER
SCALE: 1"=1'-0"

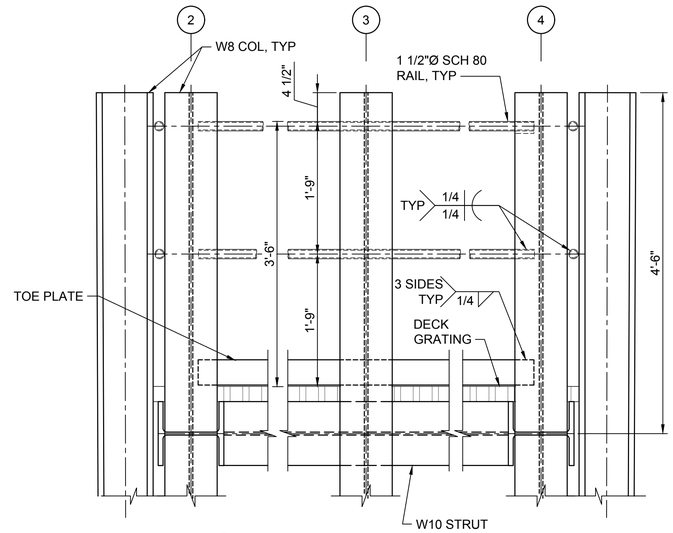

D3 S-502 SECTION - TOP DECK GUARD RAIL
SCALE: 1"=1'-0"

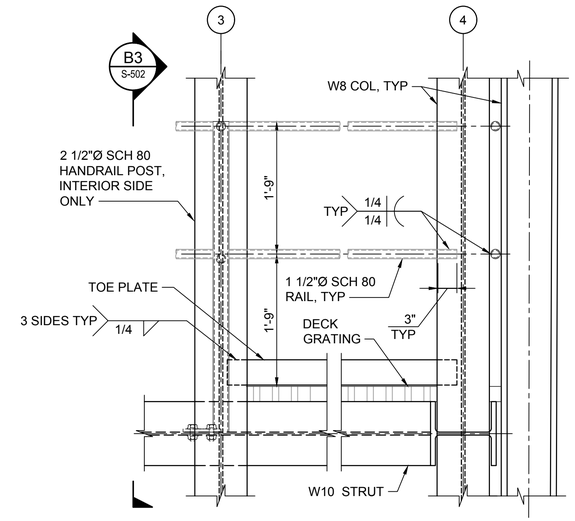

D5 S-502 SECTION - INTERMEDIATE DECK GUARD RAIL
SCALE: 1"=1'-0"

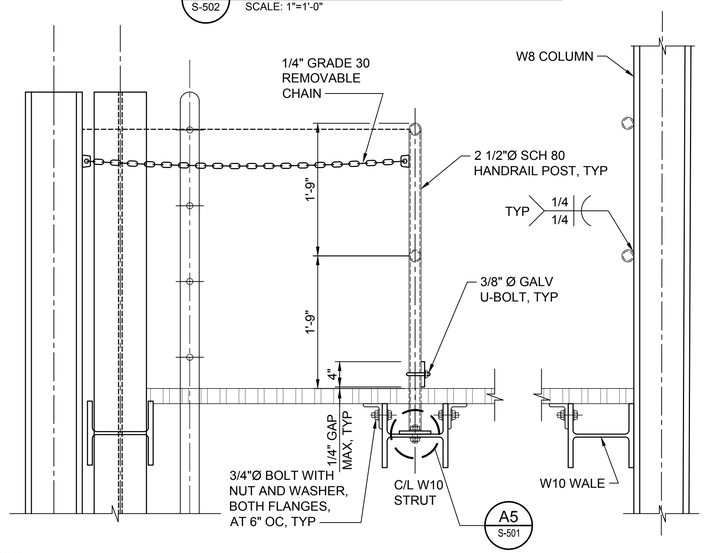

B3 S-502 ELEVATION - TYPICAL INTERMEDIATE GUARD RAIL
SCALE: 1"=1'-0"

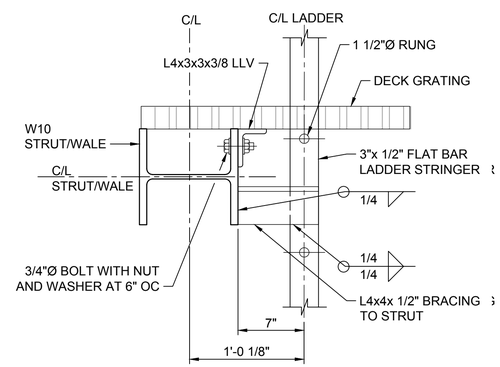

B4 S-502 DETAIL - TYPICAL LADDER CONNECTION
SCALE: 1 1/2"=1'-0"

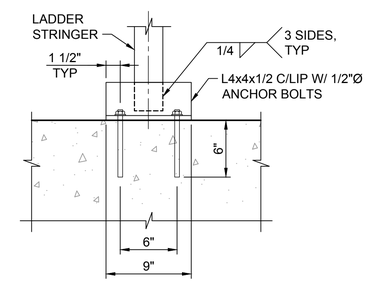

B6 S-502 DETAIL - LADDER ANCHORAGE
SCALE: 1 1/2"=1'-0"

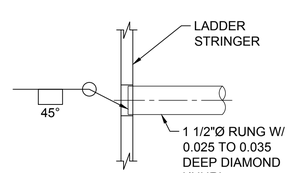

A2 S-502 DETAIL - LADDER RUNG
SCALE: 3"=1'-0"

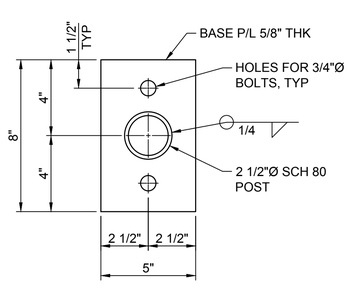

A4 S-502 DETAIL - TYPICAL GUARD POST BASE PLATE
SCALE: 3"=1'-0"

ISSUED FOR BID
ISSUED: 2025-04-04
NOT TO BE USED FOR CONSTRUCTION

ALABAMA PORT AUTHORITY
PORT OF MOBILE

Mark	Description	Date	Appr.

BLAKELEY / MUD LAKES
WEIR BOXES PROJECT

DETAILS - WEIR BOX
LADDER AND GUARD RAILS

Designed by: PWK	Cxtd by: PGV	Date: 2025-04-04	Rev.
Dwn by: HR		M&N Project No. 212511-04	
Reviewed by: MR		Drawing code:	
Submitted by: SUBMITTER'S NAME MOFFATT & NICHOL		Drawing Scale:	
		Plot scale: 1:1 (D SHEET)	

moffatt & nichol
11 N. WATER ST., SUITE 20220
MOBILE, AL 36602
251-378-9000
WWW.MOFFATTNICHOL.COM

ALABAMA PORT AUTHORITY
250 N. WATER STREET
MOBILE, AL 36602

ALABAMA LICENSED No. 50467 PROFESSIONAL ENGINEER PETER WILLIAM KOTULAK
Peter W. Kotulak
2025.04.04
SEAL 11:13:11-04'00'

Sheet Reference No.
S-502
INDEX: 19 OF 22

File: Q:\BR\212511-04\20 CADD_Active_Sheet\Set Blakeley Weir Box\212511-04-WB-S-502 - Plotted: 4/4/2025 11:06 AM by: VOELKER, PAUL - Saved: 4/1/2025 6:34 PM by: PVOELKER

DRAWING SCALES SHOWN BASED ON 22"x34" DRAWING

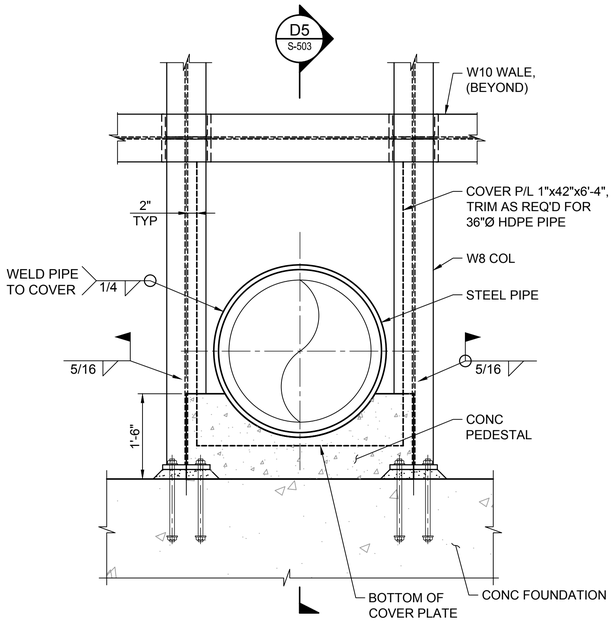

D1 S-503 SECTION - OUTFALL PIPE OPENING
SCALE: 3/4"=1'-0"

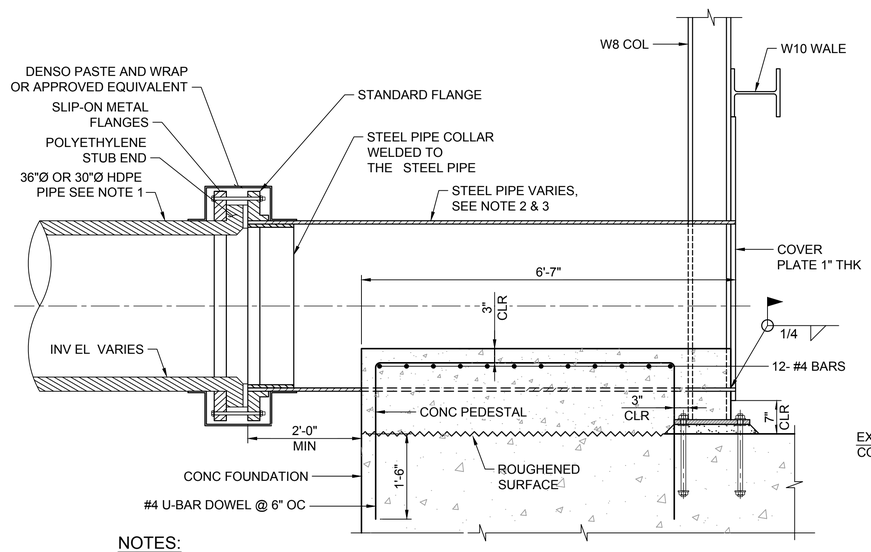

NOTES:

1. 36" Ø HDPE PIPES ARE BEING UTILIZED AT THE WEST WEIR BOX, AND 30" Ø HDPE PIPES AT THE EAST WEIR BOX, SEE SHEETS S-103, AND S-104.
2. WEST WEIR BOX OPENING TO UTILIZE 36" Ø X 3/4" THK. STEEL PIPES.
3. EAST WEIR BOX OPENINGS TO UTILIZE 30" Ø X 5/8" THK. STEEL PIPES.

D2 S-503 SECTION - OUTFALL PIPE OPENING
SCALE: 3/4"=1'-0"

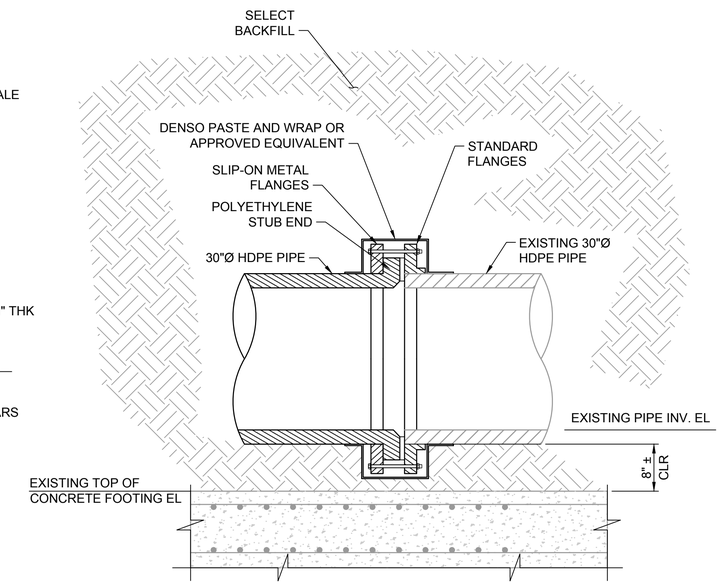

D5 S-503 SECTION - HDPE PIPE SPLICE
SCALE: 1"=1'-0"

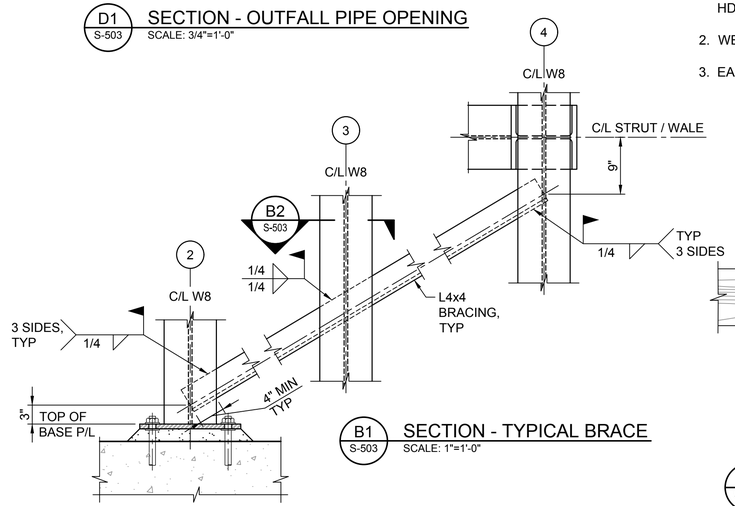

B1 S-503 SECTION - TYPICAL BRACE
SCALE: 1"=1'-0"

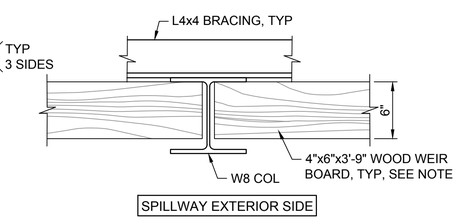

B2 S-503 SECTION - TIMBER WEIR BOARDS
SCALE: 1 1/2"=1'-0"

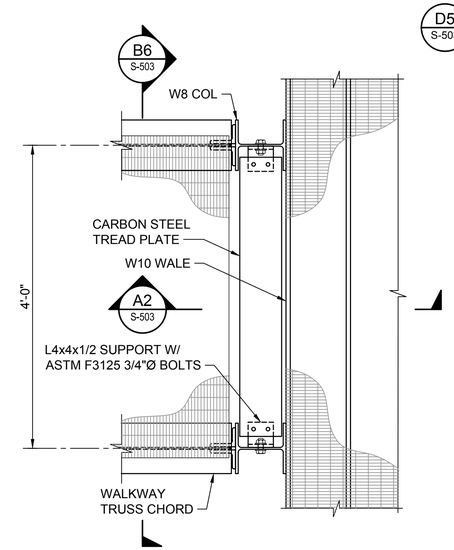

B4 S-503 DETAIL - WALKWAY CONNECTION
SCALE: 1"=1'-0"

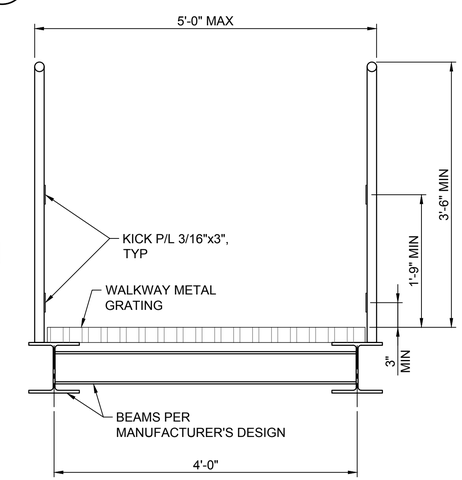

B6 S-503 SECTION - WALKWAY
SCALE: 1"=1'-0"

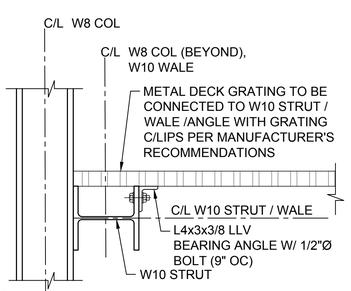

A1 S-503 DETAIL - DECK GRATING AT W10 STRUT/WALE
SCALE: 1"=1'-0"

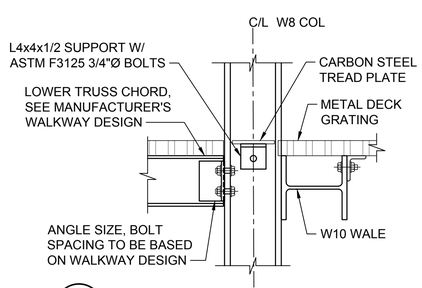

A2 S-503 SECTION - WALKWAY CONNECTION
SCALE: 1"=1'-0"

ISSUED FOR BID
ISSUED: 2025-04-04
NOT TO BE USED FOR CONSTRUCTION

ALABAMA PORT AUTHORITY
PORT OF MOBILE

Mark	Description	Date	Appr.

BLAKELEY / MUD LAKES WEIR BOXES PROJECT

DETAILS - WEIR BOX WALK AND OUTFALL PIPES

Rev:
Date: 2025-04-04
M&N Project No. 212511-04
Designed by: PWK
Drawn by: HR
Cad by: PGV
Drawing code:
Reviewed by: MR
Submitted by: SUBMITTER'S NAME MOFFATT & NICHOL
Drawing Scale:
Plot scale: 1:1 (D SHEET)

moffatt & nichol
11 N. WATER ST., SUITE 20220
MOBILE, AL 36602
251-378-9000
WWW.MOFFATTNICHOL.COM

250 N. WATER STREET
MOBILE, AL 36602
ALABAMA PORT AUTHORITY
PORT OF MOBILE

ALABAMA LICENSED No. 50467 PROFESSIONAL ENGINEER PETER WILLIAM KOTULAK
Peter W. Kotulak
2025.04.04
SEAL 11:13:11-04'00'

Sheet Reference No.
S-503
INDEX: 20 OF 22

File: Q:\BR\212511-04\20 CADD_Active_SheetSet Blakeley Weir Box\212511-04-WB-S-503 ; Plotted: 4/4/2025 11:06 AM by VOELKER, PAUL ; Saved: 3/31/2025 2:19 PM by PVOELKER

DRAWING SCALES SHOWN BASED ON 22"x34" DRAWING

NOTES:

1. FOR WORKING POINTS,SEE THE TABLE PROVIDED WITHIN THIS SHEET.

WORKING POINTS		
POINT #	NORTHING	EASTING
WP-5	263456.50	1801907.27
WP-6	263448.76	1801931.29

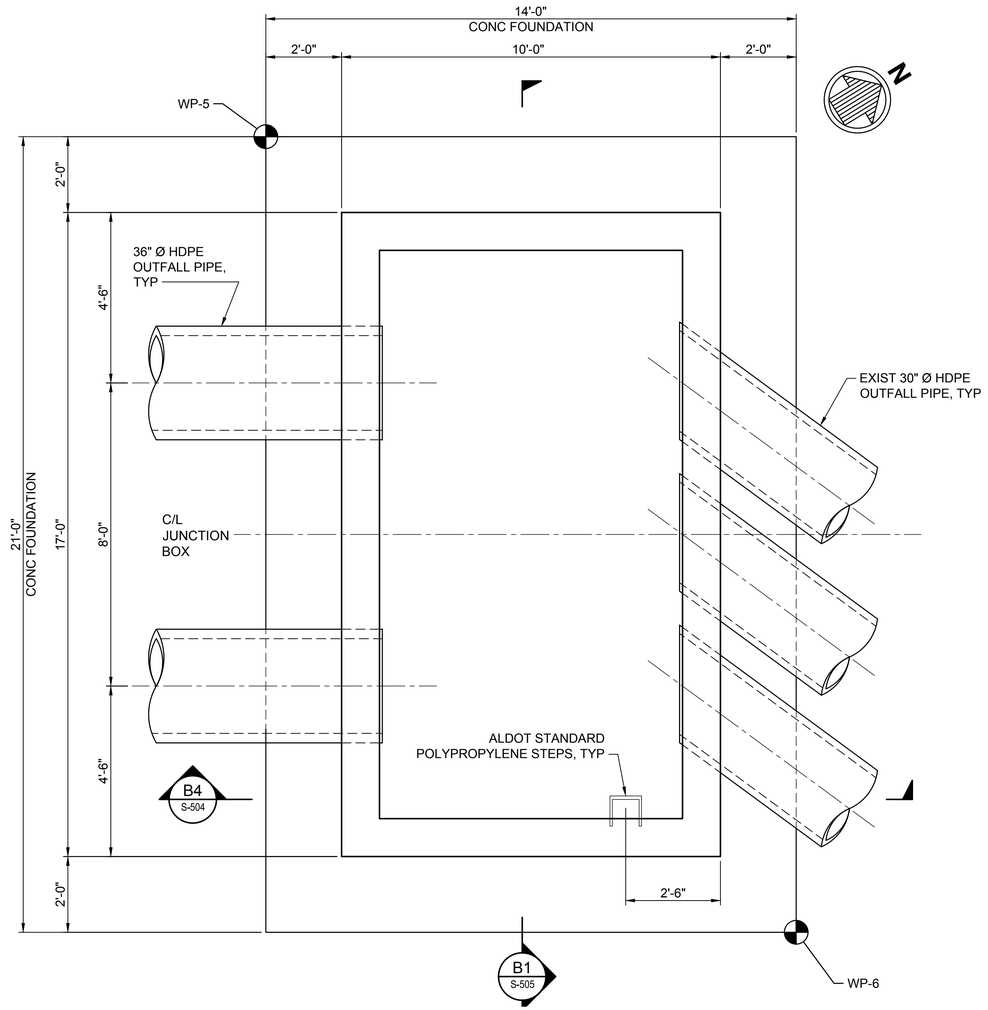

B1 S-504 PLAN - WEST JUNCTION BOX
SCALE: 1/2" = 1'-0"

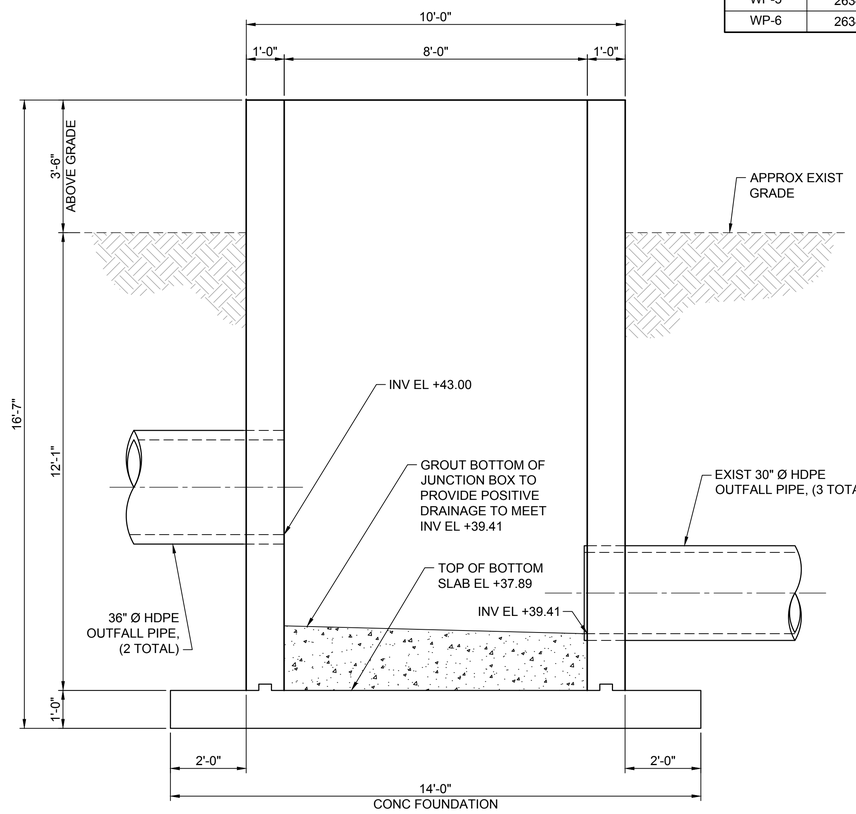

B4 S-504 SECTION - WEST JUNCTION BOX
SCALE: 1/2" = 1'-0"

2'-0" 0'-0" 2'-0" 4'-0"
SCALE: 1/2"=1'-0"

ISSUED FOR BID
ISSUED: 2025-04-04
NOT TO BE USED FOR CONSTRUCTION

ALABAMA PORT AUTHORITY
PORT OF MOBILE

Mark	Description	Date	Appr

BLAKELEY / MUD LAKES
WEIR BOXES PROJECT

DETAILS - WEST JUNCTION BOX
SHEET 1 OF 2

Designed by: PWK
Dwn by: HR
Ckd by: PGV
Reviewed by: MR
Submitted by: SUBMITTER'S NAME MOFFATT & NICHOL
Date: 2025-04-04
Rev.
M&N Project No. 212511-04
Drawing code:
Drawing Scale:
Plot scale: 1:1 (0 SHEET)

moffatt & nichol
11 N. WATER ST., SUITE 20220
MOBILE, AL 36602
251-378-9000
WWW.MOFFATTNICHOL.COM

ALABAMA PORT AUTHORITY
250 N. WATER STREET
MOBILE, AL 36602

ALABAMA LICENSED No. 50467 PROFESSIONAL ENGINEER PETER WILLIAM KOTULAK
Peter W. Kotulak
2025.04.04
SEAL 11:13:12-04'00'

Sheet
Reference No.
S-504
INDEX: 21 OF 22

File: Q:\BR\212511-04\20 CADD_Active_Sheet\Set Blakeley Weir Box\212511-04-WB-S-504 ; Plotted: 4/4/2025 11:06 AM by VOELKER, PAUL ; Saved: 3/31/2025 2:05 PM by PVOELKER

DRAWING SCALES SHOWN BASED ON 22"x34" DRAWING

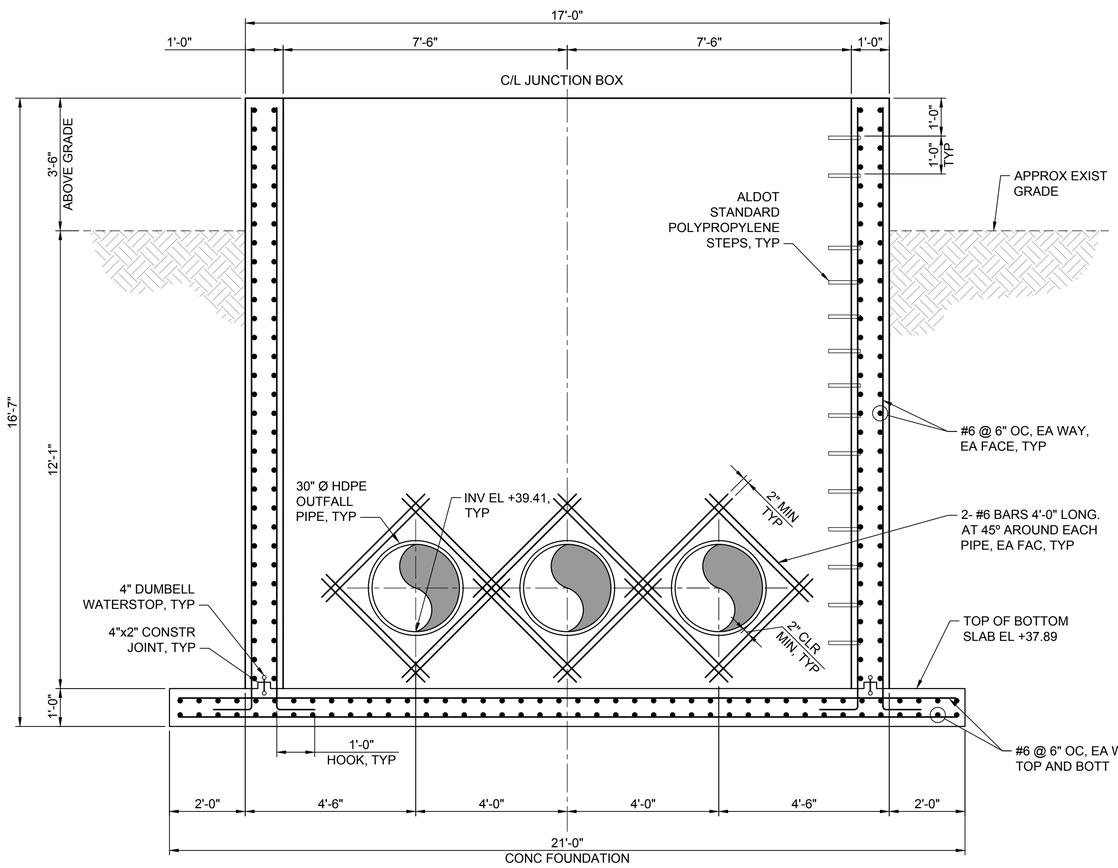

B1
S-505

SECTION - WEST JUNCTION BOX

SCALE: 1/2" = 1'-0"

2'-0" 0'-0" 2'-0" 4'-0"

SCALE: 1/2"=1'-0"

ISSUED FOR BID
ISSUED: 2025-04-04
NOT TO BE USED FOR CONSTRUCTION

ALABAMA PORT AUTHORITY
PORT OF MOBILE

Mark	Description	Date	Appr

BLAKELEY / MUD LAKES
WEIR BOXES PROJECT

DETAILS - WEST JUNCTION BOX
SHEET 2 OF 2

Designed by: PWK
Date: 2025-04-04
Rev:
Dwn by: HR
Ckd by: PGV
M&N Project No. 212511-04
Reviewed by: MR
Drawing code:
Submitted by: SUBMITTER'S NAME MOFFATT & NICHOL
Drawing Scale:
Plot scale: 1:1 (D SHEET)

moffatt & nichol
11 N. WATER ST., SUITE 20220
MOBILE, AL 36602
251-375-9000
WWW.MOFFATTNICHOL.COM

ALABAMA PORT AUTHORITY
250 N. WATER STREET
MOBILE, AL 36602

ALABAMA LICENSED No. 50467 PROFESSIONAL ENGINEER PETER W. KOTULAK
Peter W. Kotulak
2025.04.04
SEAL 11:13:13-04'00'

Sheet
Reference No.
S-505
INDEX: 22 OF 22

File: Q:\BR\212511-04\20 CADD_Active_Sheet\Set Blakeley Weir Box\212511104-WB-S-505 ; Plotted: 4/4/2025 11:06 AM by VOELKER, PAUL ; Saved: 3/5/2025 2:19 PM by TOCOOPER

DRAWING SCALES SHOWN BASED ON 22"x34" DRAWING